NFC Activity Specification

Technical Specification

NFC Forum™

ACTIVITY 1.0

NFCForum-TS-Activity-1.0

2010-11-18

Contents

Figures

Tables

Requirements

1 Introduction

1.1 Objectives

This document describes how the NFC Digital Protocol Specification can be used to set-up the communication protocol with the other device.

This document describes the building blocks, called Activities, for setting up the communication protocol.

These Activities can be used as defined in this specification or can be modified to define other ways of setting up the communication protocol, covering the same or different use cases.

Activities are combined in Profiles. Each Profile has specific Configuration Parameters and covers a particular use case.

This document covers corresponding Profiles for the NFC Forum use cases.

1.2 Audience

This document is intended for use by manufacturers wanting to implement an NFC Forum Device.

1.3 Applicable Documents or References

The following documents contain provisions that are referenced in this specification. The latest version including all published amendments applies unless a publication date is explicitly stated.

[ANALOG]	NFC Analog, In progress, NFC Forum
[DIGITAL]	NFC Digital Protocol, Version 1.0, NFC Forum
[RFC2119]	Key words for use in RFCs to Indicate Requirement Levels, RFC 2119, S. Bradner, March 1997, Internet Engineering Task Force
[T1TOP]	Type 1 Tag Operation Specification Version 1.0, NFC Forum
[T2TOP]	Type 2 Tag Operation, Version 1.0 NFC Forum
[T3TOP]	Type 3 Tag Operation, Version 1.0, NFC Forum
[T4TOP]	Type 4 Tag Operation, Version 2.0, NFC Forum

1.4 Administration

The NFC Activity Specification is an open specification supported by the Near Field Communication Forum, Inc., located at:

401 Edgewater Place, Suite 600
Wakefield, MA, 01880

Tel.: +1 781-876-8955
Fax: +1 781-610-9864

http://www.nfc-forum.org/

The NFC Devices Technical Working Group maintains this specification.

1.5 Name and Logo Usage

The Near Field Communication Forum's policy regarding the use of the trademarks *NFC Forum* and the NFC Forum logo is as follows:

- Any company MAY claim compatibility with NFC Forum specifications, whether a member of the NFC Forum or not.
- Permission to use the NFC Forum logos is automatically granted to designated members only as stipulated on the most recent Membership Privileges document, during the period of time for which their membership dues are paid.
- Member's distributors and sales representatives MAY use the NFC Forum logo in promoting member's products sold under the name of the member.
- The logo SHALL be printed in black or in color as illustrated on the Logo Page that is available from the NFC Forum at the address above. The aspect ratio of the logo SHALL be maintained, but the size MAY be varied. Nothing MAY be added to or deleted from the logos.
- Since the NFC Forum name is a trademark of the Near Field Communication Forum, the following statement SHALL be included in all published literature and advertising material in which the name or logo appears:

NFC Forum and the NFC Forum logo are trademarks of the Near Field Communication Forum.

1.6 Intellectual Property

The NFC Activity Specification conforms to the Intellectual Property guidelines specified in the NFC Forum's *Intellectual Property Rights Policy*, as outlined in the NFC Forum *Rules of Procedure*.

1.7 Special Word Usage

The key words "MUST", "MUST NOT", "REQUIRED", "SHALL", "SHALL NOT", "SHOULD", "SHOULD NOT", "RECOMMENDED", "MAY", and "OPTIONAL" in this document are to be interpreted as described in [RFC2119].

1.8 Requirement Numbering

Requirements in this document are uniquely numbered with the number appearing next to each requirement. Requirements can include informative statements in the italic font and MAY instead of MUST is used. For example:

Table 1: Sample Requirement

1.8.1.1	A car MUST have four wheels.
A car MAY have alloy wheels.	

A requirement can have different numbers in different versions of the specifications. Hence, all references to a requirement MUST include the version of the document as well as the requirement's number.

A figure that is labeled "flow chart" illustrates the behavior given by the corresponding requirements tables. Figures are informative if not otherwise stated. An example is show in Figure 1.

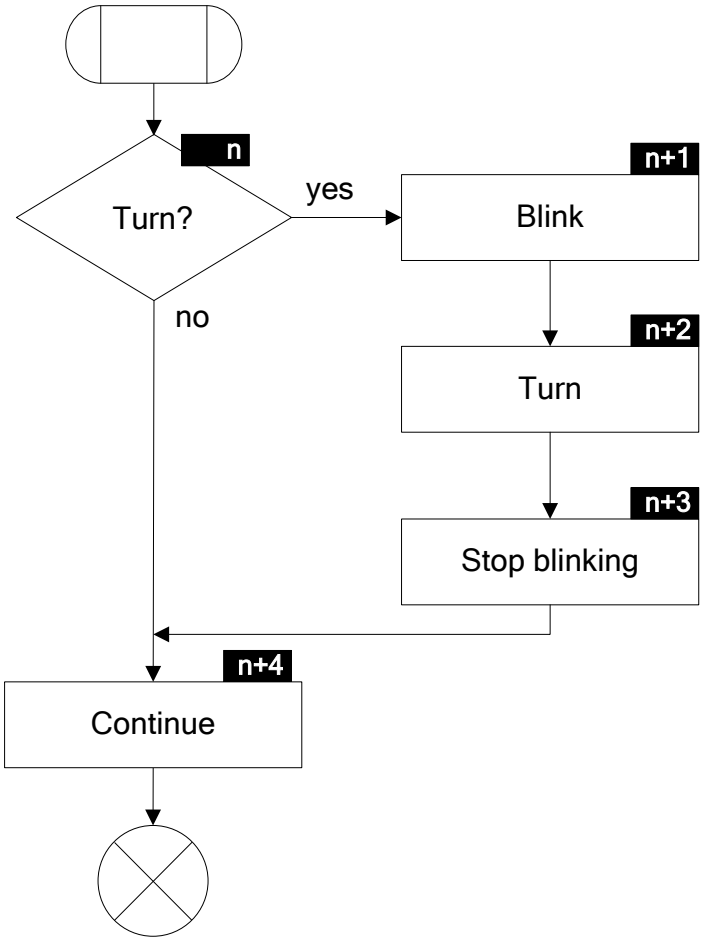

Figure 1: Example Flow Chart

A requirement can be labeled as a symbol, when referring to a flow chart, indicating a particular sequence. If the current requirement is labeled “Symbol n”, then the next requirement in the sequence is “Symbol n+1”, unless explicitly stated differently.

Table 2: Example Requirements

1.8.1.2	Symbol *n* If a car wants to turn to left or right, it MUST proceed to Symbol *n+1*. Otherwise, the car MUST proceed to Symbol *n+4*.
1.8.1.3	Symbol *n+1* The car MUST blink.
1.8.1.4	Symbol *n+2* The car MUST turn.
1.8.1.5	Symbol *n+3* The car MUST stop blinking.
1.8.1.6	Symbol *n+4* The car MUST continue to drive straight ahead or stop.

1.9 Notational Conventions

1.9.1 Notations

The notational conventions as defined in Table 3 apply to this document.

Table 3: Notational Conventions

Notation	Description
XYh	Hexadecimal notation. Values expressed in hexadecimal form are followed by a lower case “h”. For example, 27509 decimal is expressed in hexadecimal as 6B75h.
xyb	Binary notation. Values expressed in binary form are followed by a lower case “b”. For example, 82h hexadecimal is expressed in binary as 10000010b.
[…]	Optional part
xx	More than one value possible
`STATE`	States are written in **`COURIER FONT`** and in bold to distinguish them from the text.
PARAMETER	Parameters are written in Capital Letters to distinguish them from the text.
CON_	Prefix for Configuration Parameters (e.g., CON_DEVICES_LIMIT).
INT_	Prefix for variables used in the Activities (e.g., INT_COLL_PEND).
GRE_	Prefix for variables used in the Greedy Collection (e.g., GRE_POLL_A).

1.9.2 Figures

Table 4 defines the graphical notation used in the figures of this document.

Table 4: Figure Notation

Symbol	Meaning
	Activity
	Start of a flow chart
	Connection point with dedicated label as used when a flow chart is split into multiple figures
	End of a flow chart
	Test block with one input branch and several output branches
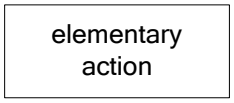	Elementary action block
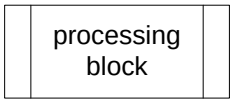	Processing block that can be decomposed in elementary action blocks and/or other processing blocks
	Connecting element with processing flow indicated by the direction of the arrow

1.10 Abbreviations

The abbreviations as used in this document are defined in Table 5.

Table 5: Abbreviations

Abbreviation	Description
AFI	Application Family Identifier
ALL_REQ	ALL NFC-A REQuest
ALLB_REQ (AFI, N1)	ALL NFC-B REQuest with matching AFI and N equal to 1
ALLB_REQ (AFI, N>)	ALL NFC-B REQuest with matching AFI and N greater than 1 and if R is greater than 1
ALLB_REQ (nAFI)	ALL NFC-B REQuest with not matching AFI
ANTICOLL	ANTICOLLision
BITR	BIT Rate
BCC	Byte Check Cln
CLn	Cascade Level n ($1 \leq n \leq 3$)
CMD	CoMmanD
CUP	Check Update Proprietary
COLL	COLLision
DA	Device Activation
DD	Device Deactivation
DE	Data Exchange
DECL	DECLared
DEP_REQ	Data Exchange Protocol REQuest
DSI	Data rate Send by Initiator
DSL	DeSeLect
Fc	Carrier Frequency
FDT	Frame Delay Time
FWT	Frame Waiting Time
GB	General Bytes
GT	Guard Time
ID	Identifier
ISO	International Organization for Standardization
LLCP	Logical Link Control Protocol
Max	Maximum
Min	Minimum
ms	millisecond
n.a.	not applicable

Abbreviation	Description
N	Number of slots
NDEF	NFC Data Exchange Format
NFC	Near Field Communication
NFC-A	Near Field Communication – Type A Technology
NFC-B	Near Field Communication – Type B Technology
NFC-F	Near Field Communication – Type F Technology
NDEF	NFC Data Exchange Format
NFCID0	NFC-B identifier. NFCID0 is always 4 bytes long.
NFCID1	NFC-A identifier. NFCID1 can be 4, 7, or 10 bytes long (simple, double, or triple size).
NFCID1 CL*n*	Contains the portion of the NFCID1 relative to the cascade level *n*. NFCID1 CL*n* is always 4 bytes long.
NFCID2	NFC-F identifier NFCID2 is always 8 bytes long.
NFCID3	NFC-DEP identifier NFCID3 is always 10 bytes long.
P2P	Peer 2 Peer
RATS	Request for Answer To Select
PEND	PENDing
PDU	Protocol Data Unit
PSL_REQ (A)	Parameter SeLection REQuest with DSI indicating NFC-A
PSL_REQ (F)	Parameter SeLection REQuest with DSI indicating NFC-F
PTGT	Proprietary Technology Guard Time
R	Randomly chosen slot number, NFC-B
RD	Request Data
REQU	REQUested
RF	Radio Frequency
RLS	ReLeaSe
SC	System Code, NFC-F
SDD	Single Device Detection
SEL	SELection
SENSB_REQ (AFI, N1)	SENS NFC-B REQuest with matching AFI and N equal to 1

Abbreviation	Description
SENSB_REQ (AFI, N>)	SENS NFC-B REQuest with matching AFI and N greater than 1 and if R is greater than 1
SENSB_REQ (nAFI)	SENS NFC-B REQuest with not matching AFI
SLEEP_AF	SLEEP NFC-A and NFC-F
TECH	TECHnology
TID	Initial Delay Time
TRFW	RF Waiting Time

1.11 Glossary

1.11.1 Field

No Remote Field Sensed

A condition of the Remote Field that indicates the absence of remote devices. For the definition, see [ANALOG].

Operating Field

The radio frequency field created by the NFC Forum Device in Poll Mode.

Operating Field Off

A condition of the Operating Field when the field strength is below a well-defined threshold. For the definition, see [ANALOG].

Operating Field On

A condition of the Operating Field when the field strength is above a well-defined threshold for a minimum period of time. For the definition, see [ANALOG].

Remote Field

The radio frequency field sensed by the NFC Forum Device in Listen Mode.

Remote Field Present

A condition of the Remote Field being stable and strong enough to put the NFC Forum Device in a state that it can operate in Passive Communication mode. For the definition, see [ANALOG].

Unmodulated Carrier

A condition of the Operating Field with no modulation present. For the definition, see [ANALOG].

1.11.2 Technology and Communication

Byte Sequence

Concatenation of hexadecimal values.

Collision

For NFC-A, a collision is a superposition of a ‘0’ and a ‘1’ as defined in [DIGITAL].

For NFC-B and NFC-F, a collision is a superposition of multiple Responses, resulting in a Transmission Error.

Command

An instruction from one device to another device in order to move the other device through a state machine.

Correct Frame

A frame without Transmission Error.

ISO-DEP Protocol

The half-duplex block transmission protocol as defined in [DIGITAL].

NFC-DEP Protocol

The half-duplex block transmission protocol as defined in [DIGITAL].

Passive Communication

A communication mode in which one device generates an Operating Field and sends Commands to a second device. To respond, this second device uses load modulation, which means that it does not generate an Operating Field but it draws power from a Remote Field.

Poll Command

A Command to probe an NFC Forum Device in Listen Mode or an NFC Forum Tag:

- ALL_REQ or SENS_REQ Command for NFC-A
- ALLB_REQ or SENSB_REQ Command for NFC-B
- SENSF_REQ Command for NFC-F

Proprietary Command

Any Command from one of the NFC technologies of which the meaning is outside of the scope of this specification. This applies in particular to the Type 1 Tag Platform, to the Type 2 Tag Platform, and to the Type 3 Tag Platform.

Proprietary Technology

Any technology of which the Command(s) used in the Technology Detection Activity do(es) NOT move the NFC Forum Device (in Listen Mode) out of the IDLE state. Further specification of Proprietary Technologies is outside the scope of this document.

Reader/Writer

Role of an NFC Forum Device reached when an NFC Forum Device in Poll Mode has gone through a number of Activities. In this mode, the NFC Forum Device behaves like a legacy contactless reader and uses Commands from one of the Technology Subsets.

Response

Information sent from one device to another device upon receipt of a Command. The information received by the other device should allow this other device to continue the data exchange.

Technology

A group of transmission Parameters defined by the NFC standard that makes a complete communication protocol. A non-exhaustive list of transmission Parameters is: RF carrier, communication mode, bit rate, modulation scheme, bit-level coding, frame format, protocol, and Command set. NFC defines three groups and therefore three Technologies: NFC-A, NFC-B, and NFC-F. The three Technologies use the same RF carrier (13.56 MHz). Each Technology uses its own modulation scheme, bit-level coding, and frame format, but may have the same protocol and Command set.

Technology Subset

A legacy platform supporting a subset of a Technology. A Technology Subset supports at least the Poll Command of the Technology. The four Technology Subsets described in this specification are:

- Type 1 Tag Platform, which uses a particular subset of NFC-A, excluding anti-collision
- Type 2 Tag Platform, which uses a particular subset of NFC-A, including anti-collision
- Type 3 Tag Platform, which uses a particular subset of NFC-F
- Type 4 Tag Platform, which uses a particular subset of NFC-A or NFC-B, including anti-collision

Valid Block, Valid PDU

A block or PDU without Protocol Error within a Correct Frame.

Valid Command, Valid Response

A Command or Response without Protocol Error within a Correct Frame.

1.11.3 Device

Card Emulator

Role of an NFC Forum Device, reached when an NFC Forum Device in Listen Mode has gone through a number of states or sub-states and in which the NFC Forum Device behaves as one of the Technology Subsets.

Initiator

Role of an NFC Forum Device reached when an NFC Forum Device in Poll Mode has gone through a number of Activities; in this mode the NFC Forum Device communicates using the NFC-DEP Protocol.

Listen Mode

Initial mode of an NFC Forum Device when it does not generate a carrier; in this mode, the NFC Forum Device listens for the Remote Field of another device.

NFC Forum Device

A device that supports the following Modus Operandi: Initiator, Target, and Reader/Writer. It may also support Card Emulator.

NFC Forum Tag

A contactless tag or (smart) card supporting NDEF.

NFCIDx

The identifiers NFCID0, NFCID1, NFCID2, and NFCID3 for NFC-B, NFC-A, NFC-F, and NFC-DEP respectively. Identifiers subsumed under the term NFCIDx always belong to the same Technology.

Poll Mode

Initial mode of an NFC Forum Device when it generates a carrier and polls for other devices.

State

A Technology-independent state of the NFC Forum Device in Listen Mode.

Sub-state

A state of the NFC Forum Device in Listen Mode, specific to a Technology or Technology Subset.

Target

Role of an NFC Forum Device, reached when the NFC Forum Device in Listen Mode has gone through a number of Activities in which the NFC Forum Device communicates using the NFC-DEP Protocol.

1.11.4 Specific to This Specification

Activity

A process within an NFC Forum Device.

Bail-out Option

A configuration option that allows the NFC Forum Device to conclude the Technology Detection Activity, if the respective Bail-out parameter is set.

Configuration Parameters

Parameters that are determined before the first Activity of a Profile is performed. Configuration Parameters cannot be changed when performing the sequence of Activities belonging to a Profile.

Greedy Collection

Temporary storage for information collected as part of the Activity and used during processing.

Poll Profile

The Profile of an NFC Forum Device when in Poll Mode.

Profile

The combination of a Resolution Process managing a set of Activities, an Initialization that chooses a set of values as Configuration Parameters, and Clean-up.

Resolution Process

The part of the adjacent upper layer managing the Activities. The Resolution Process decides the next Activity to perform and hands over the Parameters needed.

1.11.5 Errors

OTHER

A Protocol Error, Timeout Error, or Transmission Error. Refer to Section 5 for the usage of OTHER.

Protocol Error

A Semantic Error or Syntax Error.

Semantic Error

A Correct Frame with no Syntax Error is received when it is not expected.

Syntax Error

A Correct Frame is received with invalid content. In this case, the coding of the Command or the block within the frame is not consistent with [DIGITAL].

Timeout Error

No Response has been received within the Response Waiting Time. See [DIGITAL] .

Transmission Error

An incorrect frame is received. In this case, the signal modulation, the bit coding, the frame format, the timing, or the checksum is not consistent with [DIGITAL].

2 Purpose

The Activity Specification describes a layer complementary to the Digital Protocol Specification.

This document lists the requirements of the behavior of an NFC Forum device as it can be observed from monitoring the radio frequency field. The specification should be read as such, focusing on the external behavior, even if the description may be interpreted as a software implementation specification. Any implementation that creates the same external behavior as specified–and that is therefore indistinguishable from a testing point of view–meets the requirements.

It separately describes Listen Mode and Poll Mode.

Listen Mode is described in sections 3 to 5. These sections are composed of:

1. Generic requirements (see Section 3)

   These requirements must be observed to ensure interoperability between different NFC devices, and between NFC devices and existing contactless infrastructure, independent of the implementation in the NFC Forum Device.

2. Configuration (see Section 4)

   This section defines the Configuration Parameters that are available to configure the Listen Mode State Machine.

3. State Machine (see Section 5)

   This section contains the State Machine with a detailed description of all the states.

Poll Mode is described in sections 6 to 10. Those sections are composed of:

1. Generic requirements (see Section 6)

   These requirements must be observed to ensure interoperability between different NFC devices, and between NFC devices and existing contactless infrastructure, independent of the implementation in the NFC Forum Device.

2. RF Collision Avoidance (see Section 7)

   This section describes the process to prevent two NFC Forum Devices in proximity from both generating an Operating Field.

3. Activity and Profile Model (see Section 8)

   This section describes the model used to represent functional blocks, called Activities, and the dependencies and order between them, called Profiles.

4. Activities (see Section 9)

   This section describes process flows and Configuration Parameters for the following building blocks:

   - Technology detection: detects whether there is another device to communicate with and, if so, what technologies it supports
   - Collision resolution: detects the presence of multiple devices and enumerates the different identifiers

- Device activation: activates a particular device to establish a communication
- Data exchange: exchange of application data
- Device deactivation: deactivates this device to end the communication and be able to potentially activate another device

Each flow or combination of flows looks like library functions that a developer can call upon. While it is not the intention of the specification to define or prescribe APIs, the specification can be used for this purpose. The developer then has the choice to use the process flows and variables as defined in the specification or develop his own.

5. Profiles (see Section 10)

   This section defines values for the Configuration Parameters that, when used in combination with the process flows defined above, cover the NFC Forum Communication use cases.

The combination of Activities and Profiles define a predictable, deterministic behavior of the NFC Forum Device (for error-free operation). This does not limit NFC Forum Devices from implementing other building blocks or defining other Profiles for other use cases, in addition to the existing ones.

Listen Mode and its State Machine are a mandatory part of an NFC Forum Device implementation (some parts of the state machine are optional).

The NFC Forum Device must implement the generic requirements of the Poll Mode to be NFC Forum compliant.

An implementation of the Activities is optional.

If an implementation claims conformance to optional parts of the specification, all requirements must be implemented as specified.

The Profiles defined within this document are informative; however, they are recommended.

NOTE This specification does not define Profiles for testing, as testing is outside of the scope of this document. Nevertheless, NFC-Forum-related test documentation may use the concept of Profiles and the underlying processes as input for the definition of a device test application.

3 Listen Mode – Generic Requirements

The following generic requirements apply to Listen Mode.

Requirements 1: Listen Mode – Generic

Listen Mode	
3.1.1.1	For entering the Listen Mode state machine, the Operating Field MUST be in the Operating Field Off state.
3.1.1.2	If the NFC Forum Device in Listen Mode responds to a single Poll Command with a single Response, then the NFC Forum Device MUST maintain a single state machine.
3.1.1.3	If the NFC Forum Device in Listen Mode responds to a single Poll Command with multiple Responses, then the NFC Forum Device MUST maintain the equivalent number of independent state machines (i.e. a state machine for each Response).
3.1.1.4	The start state of the NFC Forum Device in Listen Mode is the **`NO_REMOTE_FIELD`** State.
3.1.1.5	If No Remote Field Sensed and not in state **`NO_REMOTE_FIELD`**, the NFC Forum Device MUST conclude the state machine and therefore the Listen Mode within a delay not greater than t_{FIELD_OFF}. Refer to Appendix B for the value of t_{FIELD_OFF}.

4 Listen Mode – Configuration

Configuration Parameters need to be set before the Listen Mode state machine can be started. They allow technology-dependent responses to be configured, and to enable and disable optional parts. The Configuration Parameters are listed in Table 6:

Table 6: Listen Mode – Configuration Parameters

Name	Format	Size	Description
CON_LISTEN_DEP_A	binary	1 bit	Controls whether to listen for NFC-A Technology with NFC_DEP support or not. - 1b: Listen for NFC-A Technology with NFC-DEP support - 0b: Do not listen for NFC-A Technology with NFC_DEP support
CON_LISTEN_DEP_F	binary	1 bit	Controls whether to listen for NFC-F Technology with NFC_DEP support or not. - 1b: Listen for NFC-F Technology with NFC-DEP support - 0b: Do not listen for NFC-F Technology with NFC-DEP support
CON_LISTEN_T3TP	binary	1 bit	Controls whether to listen for NFC-F Technology with Type 3 Tag Platform support or not. - 1b: Listen for NFC-F Technology with Type 3 Tag Platform support - 0b: Do not listen for NFC-F Technology with Type 3 Tag Platform support
CON_LISTEN_T4ATP	binary	1 bit	Controls whether to listen for NFC-A Technology with Type 4 Tag Platform support or not. - 1b: Listen for NFC-A Technology with Type 4 Tag Platform support - 0b: Do not listen for NFC-A Technology with Type 4 Tag Platform support

Name	Format	Size	Description
CON_LISTEN_T4BTP	binary	1 bit	Controls whether to listen for NFC-B Technology with Type 4 Tag Platform support or not. - 1b: Listen for NFC-B Technology with Type 4 Tag Platform support - 0b: Do not listen for NFC-B Technology with Type 4 Tag Platform support
CON_ADV_FEAT	binary	1 bit	Controls the use of advanced protocol features. - 1b: Support advanced protocol features - 0b: Do not support advanced protocol features
CON_SYS_CODE[N]	Array of Byte Sequences	variable	If configured for Type 3 Tag Platform, an ordered list of N system codes maintained by the adjacent upper layer (N>0). Otherwise, the list contains a single system code of value FFFFh as a default value (N=1).
CON_SENSF_RES	Array of Byte Sequences	variable	See SENSF_RES format in [DIGITAL]. In particular: - NFCID2 must be configured if the NFC Forum Device cannot generate random numbers - If configured for Type 3 Tag Platform, then PAD1, $\mathbf{MRTI_{CHECK}}$, $\mathbf{MRTI_{UPDATE}}$, PAD2, and RD must be configured as per [DIGITAL]. - Otherwise, these data elements can have any value.
CON_ATR_RES	Array of Byte Sequences	variable	See ATR_RES Format in [DIGITAL]. In particular: - $\mathbf{NFCID3_T}$ must be configured if the NFC Forum Device cannot generate random numbers - $\mathbf{BS_T}$, $\mathbf{BR_T}$, TO, $\mathbf{PP_T}$ need to be configured - General bytes ($\mathbf{G_T0}$…$\mathbf{G_Tn}$) need to be configured if the upper adjacent layer wants to indicate some information such as LLCP support.

Name	Format	Size	Description
CON_ATS	Array of Byte Sequences	variable	See ATS format in [DIGITAL]
CON_SENSB_RES	Array of Byte Sequences	variable	See SENSB_RES format in [DIGITAL]
CON_ATTRIB_RES	Array of Byte Sequences	variable	See ATTRIB Response in [DIGITAL], in particular MBLI
CON_BITR_F	integer	1 Byte	At least one bit of these must be set: - b2=1: 212 kbps - b3=1: 424 kbps

NOTE If the NFC Forum Device in Listen Mode responds to a single Poll Command with multiple Responses, then the NFC Forum Device should foresee Configuration Parameters for each Response and criteria for deciding which subset of Responses to send, if all Responses cannot be sent.

NOTE For NFC-B and NFC-F, when sending multiple Responses, the NFC Forum Device in Listen Mode should send a single Response within a single timeslot.

NOTE If the NFC Forum Device in Listen Mode is configured to support CON_LISTEN_DEP_F and CON_LISTEN_T3TP, it must implement two independent state machines, according to Requirement 3.1.1.3.

5 Listen Mode – State Machine

Table 7 defines the Listen Mode state machine of the NFC Forum Device. It includes all possible state transitions caused by Commands specified in [DIGITAL] for the functionality that is either mandatory (e.g., Target) or optional (e.g., Card Emulator).

NOTE The behavior of Type 1 Tag and Type 2 Tag Commands are out of scope of this specification and are therefore not included in this state machine.

Table 7: Listen Mode – State Machine

Begin State / End State	NO_REMOTE_FIELD	IDLE	READY-A	READY-A'	READY-A''	ACTIVE_A	ATR_READY_A	TARGET_A	CARD_EMULATOR_4A	SLEEP_A	READY_A*	READY_A'*	READY_A''*	ACTIVE_A*	READY_F	ATR_READY_F	TARGET_F	CARD_EMULATOR_3	SLEEP_AF	READY_B_REQU	READY_B_DECL	SLEEP_B	CARD_EMULATOR_4B
NO_REMOTE_FIELD	OTHER																						
IDLE	Remote Field Present	OTHER	OTHER [1]	OTHER	OTHER	OTHER [2]	RLS_REQ	RLS_REQ								RLS_REQ	RLS_REQ			SENSB_REQ (nAFI), ALLB_REQ (nAFI)	SENSB_REQ (nAFI), ALLB_REQ (nAFI)	ALLB_REQ (nAFI)	
READY-A		SENS_REQ, ALL_REQ	SDD_REQ CL1																				
READY-A'			SEL_REQ CL1 [3]	SDD_REQ CL2																			
READY-A''				SEL_REQ CL2 [4]	SDD_REQ CL3																		
ACTIVE_A			SEL_REQ CL1 [5]	SEL_REQ CL2 [6]	SEL_REQ CL3																		
ATR_READY_A						ATR_REQ								ATR_REQ									
TARGET_A							DEP_REQ, PSL_REQ (A), OTHER	DEP_REQ, OTHER								PSL_REQ (A)							
CARD_EMULATOR_4A						RATS			OTHER					RATS									
SLEEP_A						SLP_REQ			DESELECT	OTHER	SLP_REQ OTHER	OTHER	OTHER	OTHER									
READY_A*										ALL_REQ	SDD_REQ CL1								ALL_REQ				
READY_A'*											SEL_REQ CL1 [3]	SDD_REQ CL2											
READY_A''*												SEL_REQ CL2 [4]	SDD_REQ CL3										
ACTIVE_A*											SEL_REQ CL1 [5]	SEL_REQ CL2 [6]	SEL_REQ CL3										

Begin State / End State	NO_REMOTE_FIELD	IDLE	READY-A	READY-A'	READY-A''	ACTIVE_A	ATR_READY_A	TARGET_A	CARD_EMULATOR_4A	SLEEP_A	READY_A*	READY_A'*	READY_A''*	ACTIVE_A*	READY_F	ATR_READY_F	TARGET_F	CARD_EMULATOR_3	SLEEP_AF	READY_B_REQU	READY_B_DECL	SLEEP_B	CARD_EMULATOR_4B
READY_F		SENSF_REQ													OTHER				SENSF_REQ				
ATR_READY_F															ATR_REQ	OTHER							
TARGET_F							PSL_REQ (F)									DEP_REQ, PSL_REQ (F), OTHER	DEP_REQ, OTHER						
CARD_EMULATOR_3		CUP													CUP			OTHER	CUP				
SLEEP_AF							DSL_REQ	DSL_REQ								DSL_REQ	DSL_REQ		OTHER				
READY_B_REQU		SENSB_REQ (AFI, N>), ALLB_REQ (AFI, N>)																		OTHER	SENSB_REQ (AFI, N>), ALLB_REQ (AFI, N>)	ALLB_REQ (AFI, N>)	
READY_B_DECL		SENSB_REQ (AFI, N1), ALLB_REQ (AFI, N1)																		SENSB_REQ (AFI, N1), ALLB_REQ (AFI, N1), SLOT_MARKER	OTHER	ALLB_REQ (AFI, N1)	
SLEEP_B																					SLPB_REQ	OTHER	DESELECT
CARD_EMULATOR_4B																					ATTRIB		OTHER

[1] Except for Valid Type 1 Tag Commands. The NFC Forum Device does not change state if it implements Type 1 Tag and received a Valid Type 1 Tag Command.
[2] Except for Valid Type 2 Tag Commands. The NFC Forum Device does not change state if it implements Type 2 Tag and received a Valid Type 2 Tag Command.
[3] The SEL_REQ CL1 applies for this state change only when the NFC Forum Device in Listen Mode uses a double- or triple-size NFCID1.
[4] The SEL_REQ CL2 applies for this state change only when the NFC Forum Device in Listen Mode uses a triple-size NFCID1.
[5] The SEL_REQ CL1 applies for this state change only when the NFC Forum Device in Listen Mode uses a single-size NFCID1.
[6] The SEL_REQ CL2 applies for this state change only when the NFC Forum Device in Listen Mode uses a double-size NFCID1.

5.1 NO_REMOTE_FIELD State

The requirements in this section apply to the **NO_REMOTE_FIELD** State.

Requirements 2: Listen Mode – NO_REMOTE_FIELD State

Listen Mode	
5.1.1.1	In the **NO_REMOTE_FIELD** State, if Remote Field Present, then the NFC Forum Device MUST enter the **IDLE** State within the Guard Times as defined in [DIGITAL].
Otherwise, the NFC Forum Device MAY conclude the Listen Mode.	

5.2 IDLE State

The requirements in this section apply to the **IDLE** State. In this State, the NFC Forum Device is ready to receive Poll Commands for the Technologies it is configured for.

Requirements 3: Listen Mode – IDLE State

Listen Mode	
5.2.1.1	If CON_LISTEN_DEP_A=1 or CON_LISTEN_T4ATP=1, the NFC Forum Device MUST enter the **READY_A** Sub-state after it has received a Valid ALL_REQ Command and has transmitted its SENS_RES.
5.2.1.2	If CON_LISTEN_DEP_A=1 or CON_LISTEN_T4ATP=1, the NFC Forum Device MUST enter the **READY_A** Sub-state after it has received a Valid SENS_REQ Command and has transmitted its SENS_RES.
5.2.1.3	If CON_LISTEN_T4BTP =1, the NFC Forum Device MUST enter the **READY_B_DECL** Sub-state after it has received a Valid SENSB_REQ Command that contains an N equal to 1, an AFI that matches its own AFI. and after it has transmitted its SENSB_RES.
5.2.1.4	If CON_LISTEN_T4BTP =1, the NFC Forum Device MUST enter the **READY_B_DECL** Sub-state after it has received a Valid ALLB_REQ Command that contains an N equal to 1, an AFI that matches its own AFI, and after it has transmitted its SENSB_RES.
5.2.1.5	If CON_LISTEN_T4BTP =1, the NFC Forum Device MUST enter the **READY_B_DECL** Sub-state after it has received a Valid SENSB_REQ Command that contains an N greater than 1, an AFI that matches its own AFI, its R is 1, and after it has transmitted its SENSB_RES.
5.2.1.6	If CON_LISTEN_T4BTP =1, the NFC Forum Device MUST enter the **READY_B_DECL** Sub-state after it has received a Valid ALLB_REQ Command that contains an N greater than 1, an AFI that matches its own AFI, its R is 1, and after it has transmitted its SENSB_RES.

Listen Mode	
5.2.1.7	If CON_LISTEN_T4BTP =1, the NFC Forum Device MUST enter the **`READY_B_REQU`** Sub-state and it MUST NOT send a Response after it has received a Valid SENSB_REQ Command that contains an N greater than 1, an AFI that matched its own AFI, and its R is greater than 1.
5.2.1.8	If CON_LISTEN_T4BTP =1, the NFC Forum Device MUST enter the **`READY_B_REQU`** Sub-state MUST NOT send a Response after it has received a Valid ALLB_REQ Command that contains an N greater than 1, an AFI that matches its own AFI, and its R is greater than 1.
5.2.1.9	If CON_LISTEN_T3TP=1 and the NFC Forum Device in Listen Mode has received a Valid CHECK or UPDATE Command as defined in [T3TOP], the NFC Forum Device MUST send its Response and it MUST enter the **`CARD_EMULATOR_3`** Sub-state.
If CON_LISTEN_T3TP=1, the NFC Forum Device in Listen Mode MAY enter the CARD_EMULATOR_3 Sub-state after it has received a Proprietary Command.	
5.2.1.10	If CON_LISTEN_DEP_F=1 or CON_LISTEN_T3TP =1 and the NFC Forum Device in Listen Mode has received a Valid SENSF_REQ Command with one of the bit rates as indicated in CON_BITR_F, the NFC Forum Device MUST compare the value of SC in the SENSF_REQ sequentially with the system code values contained in CON_SYS_CODE. If the values correspond according to the conditions defined below, the NFC Forum Device in Listen Mode MUST stop the comparison and it MUST enter the **`READY_F`** Sub-state after it has transmitted its SENSF_RES, including CON_SENS_RES Response using the same bit rate of the received SENSF_REQ Command. An SC value in SENSF_REQ corresponds to the value contained in CON_SYS_CODE at index X: • If the value of SC in the SENSF_REQ Command is equal to FFFFh, or • If the value of SC in the SENSF_REQ is equal to the value of CON_SYS_CODE[X], or • If the first byte of SC in the SENSF_REQ Command has a value of FFh and the value of the second byte equals the value of the second byte of CON_SYS_CODE[X], or • If the second byte of SC in the SENSF_REQ Command has a value of FFh and the value of the first byte equals the value of the first byte of the CON_SYS_CODE[X] If the NFC Forum Device intends to include the RD bytes in the SENSF_RES according to the requirements given in [DIGITAL], the value of the RD bytes must be equal to the matching CON_SYS_CODE value.
5.2.1.11	If OTHER as defined in Table 7, the NFC Forum Device MUST NOT send a Response and it MUST stay in the IDLE State.
An NFC Forum Device MAY respond to Valid Type 1 Tag Commands and it MAY change state accordingly.	

5.3 READY_A Sub-state and READY_A* Sub-state

The requirements in this section apply to the **READY_A** and **READY_A*** Sub-states. In these states, the NFC Forum Device expects an SDD_REQ Command to retrieve the complete NFCID1.

Requirements 4: Listen Mode – READY_A SUB-STATE and READY_A* Sub-state

Listen Mode	
5.3.1.1	Upon receipt of a Valid SDD_REQ CL1 Command, the NFC Forum Device MUST send its NFCID1 CL1 and stay in the **READY_A (READY_A*)** Sub-state.
5.3.1.2	Upon receipt of a Valid SEL_REQ CL1 Command with a matching NFCID1 CL1, an NFC Forum Device with a single-size NFCID1 MUST send its SEL_RES Response and it MUST enter the **ACTIVE_A (ACTIVE_A*)** Sub-state when it is selected with its complete NFCID1. The NFC Forum Device MUST indicate in its SEL_RES Response that the NFCID1 is complete.
5.3.1.3	Upon receipt of a Valid SEL_REQ CL1 Command with a matching NFCID1 CL1, an NFC Forum Device with a double- or triple-size NFCID1 MUST send its SEL_RES Response and it MUST enter the **READY_A' (READY_A'*)** Sub-state.
5.3.1.4	If OTHER, the NFC Forum Device MUST NOT send a Response. When in the **READY_A** Sub-state, the NFC Forum Device MUST return to the **IDLE** State. When in the **READY_A*** Sub-state, the NFC Forum Device MUST return to the **SLEEP_A** Sub-state.

5.4 READY_A' Sub-state and READY_A'* Sub-state

The requirements in this section apply to the **READY_A'** and **READY_A'*** Sub-states. The **READY_A'** and **READY_A'*** Sub-states are intermediate states that only exist for NFC Forum Devices with double- and triple-size NFCID1. In these states, the cascade level 1 of the NFCID1 has been selected.

Requirements 5: Listen Mode – READY_A'SUB-STATE and READY_A'* Sub-state

Listen Mode	
5.4.1.1	Upon receipt of a Valid SDD_REQ CL2 Command, an NFC Forum Device MUST send its NFCID1 CL2 and stay in the **READY_A' (READY_A'*)** Sub-state.
5.4.1.2	Upon receipt of a Valid SEL_REQ CL2 Command with a matching NFCID1 CL2, an NFC Forum Device with a double-size NFCID1 MUST send its SEL_RES Response and it MUST enter the **ACTIVE_A** (**ACTIVE_A***) Sub-state when it is selected with its complete NFCID1. The NFC Forum Device MUST indicate in its SEL_RES Response that the NFCID1 is complete.
5.4.1.3	Upon receipt of a Valid SEL_REQ CL2 Command with a matching NFCID1 CL2, an NFC Forum Device with a triple-size NFCID1 MUST send its SEL_RES Response and it MUST enter the **READY_A" (READY_A"*)** Sub-state.
5.4.1.4	If OTHER, the NFC Forum Device MUST NOT send a Response. When in the **READY_A'** Sub-state, the NFC Forum Device MUST return to the **IDLE** State. When in the **READY_A'*** Sub-state, the NFC Forum Device MUST return to the **SLEEP_A** Sub-state.

5.5 READY_A" Sub-state and READY_A"* Sub-state

The requirements in this section apply to the **READY_A"** and **READY_A"*** Sub-states. The **READY_A"** and **READY_A"*** Sub-states are intermediate states that only exist for NFC Forum Devices with triple-size NFCID1. In these states, the cascade level 1 and 2 of the NFCID1 have been selected.

Requirements 6: Listen Mode – READY_A'' SUB-STATE and READY_A''* Sub-state

Listen Mode	
5.5.1.1	Upon receipt of a Valid SDD_REQ CL3 Command, an NFC Forum Device MUST send its NFCID1 CL3 and stay in the **READY_A" (READY_A"*)** Sub-state.
5.5.1.2	Upon receipt of a Valid SEL_REQ CL3 Command with a matching NFCID1 CL3, an NFC Forum Device with a triple-size NFCID1 MUST send its SEL_RES Response and it MUST enter the **ACTIVE_A** (**ACTIVE***) Sub-state when it is selected with its complete NFCID1. The NFC Forum Device MUST indicate in its SEL_RES Response that the NFCID1 is complete.
5.5.1.3	If OTHER, the NFC Forum Device MUST NOT send a Response. When in the **READY_A"** Sub-state, the NFC Forum Device MUST return to the **IDLE** State. When in the **READY_A"*** Sub-state, the NFC Forum Device MUST return to the **SLEEP_A** Sub-state.

5.6 ACTIVE_A Sub-state and ACTIVE_A* Sub-state

The requirements in this section apply to the **ACTIVE_A** and **ACTIVE_A*** Sub-states. In these states, the NFC Forum Device expects Commands for protocol activation.

Requirements 7: Listen Mode – ACTIVE_A SUB-STATE and ACTIVE_A* Sub-state

Listen Mode	
5.6.1.1	Upon receipt of a Valid SLP_REQ Command, the NFC Forum Device MUST enter the **SLEEP_A** Sub-state.
5.6.1.2	Upon receipt of a Valid ATR_REQ Command, the NFC Forum Device MUST send its ATR_RES Response and it MUST enter the **ATR_READY_A** Sub-state.
5.6.1.3	If CON_LISTEN_T4ATP =1, the NFC Forum Device MUST send its ATS Response and it MUST enter the **CARD_EMULATOR_4A** Sub-state after it has received a Valid RATS Command,.
5.6.1.4	If OTHER as defined in Table 7, the NFC Forum Device MUST NOT send a Response. When in the **ACTIVE_A** Sub-state, the NFC Forum Device MUST return to the **IDLE** State. When in the **ACTIVE_A*** Sub-state, the NFC Forum Device MUST return to the **SLEEP_A** Sub-state.
An NFC Forum Device MAY respond to Valid Type 2 Tag Commands and it MAY change state accordingly.	

5.7 SLEEP_A Sub-state

The requirements in this section apply to the **SLEEP_A** Sub-state. In this state, the NFC Forum Device only responds to an ALL_REQ Command.

Requirements 8: Listen Mode – SLEEP_A Sub-state

Listen Mode	
5.7.1.1	Upon receipt of a Valid ALL_REQ Command, the NFC Forum Device MUST send its SENS_RES Response and it MUST enter the **READY_A*** Sub-state.
5.7.1.2	If OTHER, the NFC Forum Device MUST NOT send a Response and it MUST stay in the **SLEEP_A** Sub-state.

5.8 ATR_READY_A Sub-state

The requirements in this section apply to the **ATR_READY_A** Sub-state. In this state, the NFC Forum Device expects a PSL_REQ or a DEP_REQ Command.

Requirements 9: Listen Mode – ATR_READY_A Sub-state

Listen Mode	
5.8.1.1	Upon receipt of a Valid DEP_REQ Command, the NFC Forum Device MUST send its DEP_RES Response and it MUST enter the **TARGET_A** Sub-state.
5.8.1.2	Upon receipt of a Valid PSL_REQ Command with DSI set to 000b, the NFC Forum Device MUST send its PSL_RES Response and it MUST enter the **TARGET_A** Sub-state. Refer to [DIGITAL] for details on DSI coding.
5.8.1.3	Upon receipt of a Valid PSL_REQ Command with DSI set to 001b or 010b, the NFC Forum Device MUST send its PSL_RES Response and it MUST enter the **TARGET_F** Sub-state. Refer to [DIGITAL] for details on DSI coding.
5.8.1.4	Upon receipt of a Valid DSL_REQ Command, the NFC Forum Device MUST send its DSL_RES Response and it MUST enter the **SLEEP_AF** Sub-state.
5.8.1.5	Upon receipt of a Valid RLS_REQ Command, the NFC Forum Device MUST send its RLS_RES Response and it MUST enter the **IDLE** State.
5.8.1.6	If OTHER, the NFC Forum Device MUST NOT send a Response and it MUST stay in the **TARGET_A** Sub-state.

5.9 TARGET_A Sub-state

The requirements in this section apply to the **TARGET_A** Sub-state. In this state, the NFC Forum Device expects higher layer messages.

Requirements 10: Listen Mode – TARGET_A Sub-state

Listen Mode	
5.9.1.1	Upon receipt of a Valid DEP_REQ Command, the NFC Forum Device MUST send its DEP_RES Response and stay in the **TARGET_A** Sub-state.
5.9.1.2	Upon receipt of a Valid DSL_REQ Command, the NFC Forum Device MUST send its DSL_RES Response and it MUST enter the **SLEEP_AF** Sub-state.
5.9.1.3	Upon receipt of a Valid RLS_REQ Command, the NFC Forum Device MUST send its RLS_RES Response and it MUST enter the **IDLE** State.
5.9.1.4	If OTHER, the NFC Forum Device MUST NOT send a Response and it MUST stay in the **TARGET_A** Sub-state.

5.10 CARD_EMULATOR_4A Sub-state

The requirements in this section apply to the **CARD_EMULATOR_4A** Sub-state. In this state, the NFC Forum Device expects higher layer messages or an S(DESELECT) Request (see [DIGITAL]).

Requirements 11: Listen Mode – CARD_EMULATOR_4A Sub-state

Listen Mode	
5.10.1.1	Upon receipt of a Valid S(DESELECT) Request (as defined in [DIGITAL]), the NFC Forum Device MUST send its S(DESELECT) Response and it MUST enter the **SLEEP_A** Sub-state.
5.10.1.2	Upon receipt of a Valid Command in compliance with the Type 4A Tag Platform as specified in [DIGITAL], the NFC Forum Device MUST send its Response and it MUST stay in the **CARD_EMULATOR_4A** Sub-state.
5.10.1.3	If OTHER, the NFC Forum Device MUST NOT send a Response and it MUST stay in the **CARD_EMULATOR_4A** Sub-state.

5.11 READY_B_REQU Sub-state

The requirements in this section apply when the NFC Forum Device is in the **READY_B_REQU** Sub-state. In this state, the NFC Forum Device expects an ALLB_REQ, a SENSB_REQ, or a corresponding SLOT_MARKER Command.

Requirements 12: Listen Mode – READY_B_REQU Sub-state

Listen Mode	
5.11.1.1	Upon receipt of a Valid SENSB_REQ Command that contains an N equal to 1 and an AFI that matches its own AFI, the NFC Forum Device MUST send its SENSB_RES and it MUST enter the **READY_B_DECL** Sub-state.
5.11.1.2	Upon receipt of a Valid ALLB_REQ Command that contains an N equal to 1 and an AFI that matches its own AFI, the NFC Forum Device MUST send its SENSB_RES and it MUST enter the **READY_B_DECL** Sub-state.
5.11.1.3	Upon receipt of a Valid SENSB_REQ Command that contains an N greater than 1, an AFI that matches its own AFI, and its R is 1, the NFC Forum Device MUST send its SENSB_RES and it MUST enter the **READY_B_DECL**.
5.11.1.4	Upon receipt of a Valid ALLB_REQ Command that contains an N greater than 1, an AFI that matches its own AFI, and its R is 1, the NFC Forum Device MUST send its SENSB_RES and it MUST enter the **READY_B_DECL** Sub-state.
5.11.1.5	Upon receipt of a Valid SENSB_REQ Command that contains an N greater than 1, an AFI that matches its own AFI, and its R is greater than 1, the NFC Forum Device MUST NOT send a Response and it MUST stay in the **READY_B_REQU** Sub-state.
5.11.1.6	Upon receipt of a Valid ALLB_REQ Command that contains an N greater than 1, an AFI that matches its own AFI, and its R is greater than 1, the NFC Forum Device MUST NOT send a Response and it MUST stay in the **READY_B_REQU** Sub-state.
5.11.1.7	Upon receipt of a Valid SLOT_MARKER Command indicating a Slot number matching R (as calculated at the reception of the last SENSB_REQ or ALLB_REQ), the NFC Forum Device MUST send its SENSB_RES and it MUST enter the **READY_B_DECL** Sub-state.
5.11.1.8	Upon receipt of a Valid SENSB_REQ Command that contains an AFI that does not match its own AFI, the NFC Forum Device MUST NOT send its SENSB_RES and it MUST enter the **IDLE** Sub-state.
5.11.1.9	Upon receipt of a Valid ALLB_REQ Command that contains an AFI that does not match its own AFI, the NFC Forum Device MUST NOT send a Response and it MUST enter the **IDLE** Sub-state.
5.11.1.10	If OTHER, the NFC Forum Device MUST NOT send a Response and it MUST stay in the **READY_B_REQU** Sub-state.

5.12 READY_B_DECL Sub-state

The requirements in this section apply when the NFC Forum Device is in the **READY_B_DECL** Sub-state. In this state, the NFC Forum Device expects an ATTRIB or a SLPB_REQ Command.

Requirements 13: Listen Mode – READY_B_DECL Sub-state

Listen Mode	
5.12.1.1	Upon receipt of a Valid ATTRIB Command, the NFC Forum Device MUST send its ATTRIB Response and it MUST enter the **CARD_EMULATOR_4B** Sub-state.
5.12.1.2	Upon receipt of a Valid SLPB_REQ Command, the NFC Forum Device MUST send its SLPB_RES and it MUST enter the **SLEEP_B** Sub-state.
5.12.1.3	Upon receipt of a Valid SENSB_REQ Command that contains an N equal to 1 and an AFI that matches its own AFI, the NFC Forum Device MUST send its SENSB_RES and it MUST stay in the **READY_B_DECL** Sub-state.
5.12.1.4	Upon receipt of a Valid ALLB_REQ Command that contains an N equal to 1 and an AFI that matches its own AFI, the NFC Forum Device MUST send its SENSB_RES and it MUST stay in the **READY_B_DECL** Sub-state.
5.12.1.5	Upon receipt of a Valid SENSB_REQ Command that contains an N greater than 1, an AFI that matches its own AFI, and its R is 1, the NFC Forum Device MUST send its SENSB_RES and it MUST stay in the **READY_B_DECL** Sub-state.
5.12.1.6	Upon receipt of a Valid ALLB_REQ Command that contains an N greater than 1, an AFI that matches its own AFI, and its R is 1, the NFC Forum Device MUST send its SENSB_RES and it MUST stay in the **READY_B_DECL** Sub-state.
5.12.1.7	Upon receipt of a Valid SENSB_REQ Command that contains an N greater than 1, an AFI that matches its own AFI, and its R is greater than 1, the NFC Forum Device MUST NOT send a Response and it MUST enter the **READY_B_REQU** Sub-state.
5.12.1.8	Upon receipt of a Valid ALLB_REQ Command that contains an N greater than 1, an AFI that matches its own AFI, and its R is greater than 1, the NFC Forum Device MUST NOT send a Response and it MUST enter the **READY_B_REQU** Sub-state.
5.12.1.9	Upon receipt of a Valid SENSB_REQ Command that contains an AFI that does not match its own AFI, the NFC Forum Device MUST NOT send a Response and it MUST enter the **IDLE** Sub-state.
5.12.1.10	Upon receipt of a Valid ALLB_REQ Command that contains an AFI that does not match its own AFI, the NFC Forum Device MUST NOT send a Response and it MUST enter the **IDLE** Sub-state.
5.12.1.11	If OTHER, the NFC Forum Device MUST NOT send a Response and it MUST stay in the **READY_B_DECL** Sub-state.

5.13 SLEEP_B Sub-state

The requirements in this section apply when the NFC Forum Device is in the **SLEEP_B** Sub-state. In this state, the NFC Forum Device expects an ALLB_REQ Command.

Requirements 14: Listen Mode – SLEEP_B Sub-state

Listen Mode	
5.13.1.1	Upon receipt of a Valid ALLB_REQ Command that contains an N equal to 1 and an AFI that matches its own AFI, the NFC Forum Device MUST send its SENSB_RES and it MUST enter the **READY_B_DECL** Sub-state.
5.13.1.2	Upon receipt of a Valid ALLB_REQ Command that contains an N greater than 1, an AFI that matches its own AFI, and its R is 1, the NFC Forum Device MUST send its SENSB_RES and it MUST enter the **READY_B_DECL** Sub-state.
5.13.1.3	Upon receipt of a Valid ALLB_REQ Command that contains an N greater than 1, an AFI that matches its own AFI, and its R is greater than 1, the NFC Forum Device MUST NOT send a Response and it MUST enter the **READY_B_REQU** Sub-state.
5.13.1.4	Upon receipt of a Valid ALLB_REQ Command that contains an AFI that does not match its own AFI, the NFC Forum Device MUST NOT send a Response and it MUST enter the **IDLE** Sub-state.
5.13.1.5	If OTHER, the NFC Forum Device MUST NOT send a Response and it MUST stay in the **SLEEP_B** Sub-state.

5.14 CARD_EMULATOR_4B Sub-state

The requirements in this section apply when the NFC Forum Device is in the **CARD_EMULATOR_4B** Sub-state. In this state, the NFC Forum Device expects higher layer messages or an S(DESELECT) Request (see [DIGITAL]).

Requirements 15: Listen Mode – CARD_EMULATOR_4B Sub-state

Listen Mode	
5.14.1.1	Upon receipt of a Valid S(DESELECT) Request (as defined in [DIGITAL]), the NFC Forum Device MUST send its S(DESELECT) Response and it MUST enter the **SLEEP_B** Sub-state.
5.14.1.2	Upon receipt of a Valid Command in compliance with the Type 4B Tag Platform as specified in [DIGITAL], the NFC Forum Device MUST send its Response and it MUST stay in the **CARD_EMULATOR_4B** Sub-state.
5.14.1.3	If OTHER, the NFC Forum Device MUST NOT send a Response and it MUST stay in the **CARD_EMULATOR_4B** Sub-state.

5.15 READY_F Sub-state

The requirements in this section apply to the **READY_F** Sub-state. In this state, the NFC Forum Device expects an ATR_REQ, a POLLING, a CHECK, or an UPDATE Command.

Requirements 16: Listen Mode – READY_F Sub-state

Listen Mode	
5.15.1.1	Upon receipt of a Valid ATR_REQ Command, the NFC Forum Device MUST send its ATR_RES Response and it MUST enter the **ATR_READY_F** Sub-state.
5.15.1.2	Upon receipt of a Valid CHECK or UPDATE Command as referred to in [DIGITAL] and defined in [T3TOP], the NFC Forum Device MUST send its Response and MUST enter the **CARD_EMULATOR_3** Sub-state.
5.15.1.3	Upon receipt of a Valid SENSF_REQ Command, the NFC Forum Device MUST compare the value of SC in the SENSF_REQ sequentially with the system code values contained in CON_SYS_CODE. If the values correspond according to the conditions defined below, the NFC Forum Device in Listen Mode MUST stop the comparison, it must send its Response, and it MUST stay in the **READY_F** Sub-state. An SC value in SENSF_REQ corresponds to the value contained in CON_SYS_CODE at index X: • If the value of SC in the SENSF_REQ Command is equal to FFFFh, or • If the value of SC in the SENSF_REQ is equal to the value of CON_SYS_CODE[X], or • If the first byte of SC in the SENSF_REQ Command has a value of FFh and the value of the second byte equals the value of the second byte of CON_SYS_CODE[X], or • If the second byte of SC in the SENSF_REQ Command has a value of FFh and the value of the first byte equals the value of the first byte of the CON_SYS_CODE[X] If the NFC Forum Device will include the RD bytes in the SENSF_RES according to the requirements given in [DIGITAL], the value of the RD bytes must be equal to the matching CON_SYS_CODE value.
5.15.1.4	If OTHER, except for Proprietary Commands, the NFC Forum Device MUST NOT send a Response and it MUST stay in the **READY_F** Sub-state.
Upon receipt of a Proprietary Command, the NFC Forum Device MAY enter the CARD_EMULATOR_3 Sub-state.	

NOTE The READY_F state is known as MODE_0 in other, non-NFC-Forum specifications (e.g., JIS X 6319-4).

5.16 ATR_READY_F Sub-state

The requirements in this section apply to the **ATR_READY_F** Sub-state. In this state, the NFC Forum Device expects a PSL_REQ or a DEP_REQ Command.

Requirements 17: Listen Mode – ATR_READY_F Sub-state

Listen Mode	
5.16.1.1	Upon receipt of a Valid DEP_REQ Command, the NFC Forum Device MUST send its DEP_RES Response and it MUST enter the **TARGET_F** Sub-state.
5.16.1.2	Upon receipt of a Valid PSL_REQ Command with DSI set to 001b or 010b, the NFC Forum Device MUST send its PSL_RES Response and it MUST enter the **TARGET_F** Sub-state. Refer to [DIGITAL] for details regarding DSI coding.
5.16.1.3	Upon receipt of a Valid PSL_REQ Command with DSI set to 000b, the NFC Forum Device MUST send its PSL_RES Response and it MUST enter the **TARGET_A** Sub-state. Refer to [DIGITAL] for details regarding DSI coding.
5.16.1.4	Upon receipt of a Valid RLS_REQ Command, the NFC Forum Device MUST send its RLS_RES Response and it MUST enter the **IDLE** Sub-state.
5.16.1.5	Upon receipt of a Valid DSL_REQ Command, the NFC Forum Device MUST send its DSL_RES Response and it MUST enter the **SLEEP_AF** Sub-state.
5.16.1.6	If OTHER, the NFC Forum Device MUST NOT send a Response and it MUST stay in the **ATR_READY_F** Sub-state.

5.17 TARGET_F Sub-state

The requirements in this section apply to the **TARGET_F** Sub-state. In this state, the NFC Forum Device expects higher layer messages.

Requirements 18: Listen Mode – TARGET_F Sub-state

Listen Mode	
5.17.1.1	Upon receipt of a Valid DEP_REQ Command, the NFC Forum Device MUST send its DEP_RES Response and it MUST stay the **TARGET_F** Sub-state.
5.17.1.2	Upon receipt of a Valid RLS_REQ Command, the NFC Forum Device MUST send its RLS_RES Response and it MUST enter the **IDLE** Sub-state.
5.17.1.3	Upon receipt of a Valid DSL_REQ Command, the NFC Forum Device MUST send its DSL_RES Response and it MUST enter the **SLEEP_AF** Sub-state.
5.17.1.4	If OTHER, the NFC Forum Device MUST NOT send a Response and it MUST stay in the **TARGET_F** Sub-state.

5.18 CARD_EMULATOR_3 Sub-state

The requirements in this section apply to the **CARD_EMULATOR_3** Sub-state. In this state, the NFC Forum Device expects Valid Commands according to the Type 3 Tag Platform as defined in [DIGITAL].

Requirements 19: Listen Mode – CARD_EMULATOR_3 Sub-state

Listen Mode	
5.18.1.1	Upon receipt of a Valid Command in compliance with the Type 3 Tag Platform as specified in [DIGITAL], the NFC Forum Device MUST send its Response and it MUST stay in the **CARD_EMULATOR_3** Sub-state.
Upon receipt of a Proprietary Command, the NFC Forum Device MAY send its Response and stay in the CARD_EMULATOR_3 Sub-state	
5.18.1.2	If OTHER, except for Proprietary Commands, the NFC Forum Device MUST NOT send a Response and it MUST stay in the **CARD_EMULATOR_3** Sub-state.

5.19 SLEEP_AF Sub-state

The requirements in this section apply to the **SLEEP_AF** Sub-state. In this state, the device has been deselected by means of a NFC-DEP DSL_REQ Command. The NFC Forum Device expects an ALL_REQ, a SENSF_REQ, or a CUP Command.

Requirements 20: Listen Mode – SLEEP_AF Sub-state

Listen Mode	
5.19.1.1	If CON_LISTEN_DEP_A=1 or CON_LISTEN_T4ATP=1, and upon receipt of a Valid ALL_REQ Command, the NFC Forum Device MUST send its SENS_RES and it MUST enter the **READY_A*** Sub-state.
5.19.1.2	If CON_LISTEN_DEP_F=1 or CON_LISTEN_T3TP =1, upon receipt of a Valid SENSF_REQ Command, the NFC Forum Device MUST compare the value of SC in the SENSF_REQ sequentially with the system code values contained in CON_SYS_CODE. If the values correspond according to the conditions defined below, the NFC Forum Device in Listen Mode MUST stop the comparison, it must send its Response, and it MUST enter the **READY_F** Sub-state. An SC value in SENSF_REQ corresponds to the value contained in CON_SYS_CODE at index X: • If the value of SC in the SENSF_REQ Command is equal to FFFFh, or • If the value of SC in the SENSF_REQ is equal to the value of CON_SYS_CODE[X], or • If the first byte of SC in the SENSF_REQ Command has a value of FFh and the value of the second byte equals the value of the second byte of CON_SYS_CODE[X], or • If the second byte of SC in the SENSF_REQ Command has a value of FFh and the value of the first byte equals the value of the first byte of the CON_SYS_CODE[X] If the NFC Forum Device intends to include the RD bytes in the SENSF_RES according to the requirements given in [DIGITAL], the value of the RD bytes must be equal to the matching CON_SYS_CODE value.
5.19.1.3	If CON_LISTEN_T3TP =1 and the NFC Forum Device in Listen Mode has received a Valid CHECK or UPDATE Command as referenced in [DIGITAL] and defined in [T3TOP], the NFC Forum Device MUST send its Response and it MUST enter the **CARD_EMULATOR_3** Sub-state.
If CON_LISTEN_T3TP =1, the NFC Forum Device in Listen Mode MAY enter the CARD_EMULATOR_3 Sub-state after it has received a Proprietary Command for the Type 3 Tag Platform.	
5.19.1.4	If OTHER, the NFC Forum Device MUST NOT send a Response and it MUST stay in the **SLEEP_AF** Sub-state.

6 Poll Mode – Generic Requirements

This section contains generic requirements that must be observed, independent of whether the NFC Forum Device chooses to implement the Activities described in this document or not.

Requirements 21 contains the list of generic requirements.

Requirements 21: Generic

6.1.1.1	When the NFC Forum Device in Poll Mode sets the Operating Field to the Operating Field Off state (carrier off, as defined in [ANALOG]) other than for NFC-A modulation purposes, then the Operating Field MUST be set to Operating Field Off state for a time of at least t_{FIELD_OFF}. Refer to Appendix B for the value of t_{FIELD_OFF}.
6.1.1.2	When the NFC Forum Device in Poll Mode generates a Poll Command initially after setting the Operating Field to Operating Field On state or when generating subsequent Poll Command of different technology, these MUST be preceded by a period during which the NFC Forum Devices sends Unmodulated Carrier (as defined in [ANALOG]). The duration of this period is referred to as Guard Time and the NFC Forum Device MUST comply with the following Guard Times: • GT_A for NFC-A • GT_B for NFC-B • GT_F for NFC-F If polling for NFC-F is preceded by polling for NFC-B, then GT_F is equal to GT_{BF}. Otherwise, GT_F is equal to GT_{FB}. For a more detailed definition of the Guard Times for each technology, see [DIGITAL]. Refer to Appendix B for the values of GT_A, GT_B, GT_{BF} and GT_{FB}. *This does not apply to consecutive Poll Commands as well as a Poll Command following a Sleep Command.*
6.1.1.3	For the NFC Forum Device in Poll Mode, if the PSL_REQ Command is used, it MUST be sent as the first Command of the NFC-DEP Protocol Data Exchange, i.e., before the first DEP_REQ Command. • The PSL_REQ (A) as used in the state machine is a PSL_REQ with DSI set to 000b. • The PSL_REQ (F) as used in the state machine is a PSL_REQ with DSI set to 001b or 010b. Refer to [DIGITAL] for the coding of the PSL_REQ Command.
6.1.1.4	An NFC Forum Device MUST perform RF Collision Avoidance (see Section 7) before generating an Operating Field.
6.1.1.5	When the NFC Forum Device in Poll Mode includes Poll Commands for one or more Proprietary Technologies, then the Proprietary Technologies MUST be polled after the NFC Technology(ies).

6.1.1.6 For introducing Proprietary Technologies, the NFC Forum Device MUST wait with Unmodulated Carrier for a period after a Poll Command. The duration of this period is the sum of FDT/FWT for the Poll Command and the Proprietary Technology Guard Time.

The resulting timings are:

- If polling for Proprietary Technology is preceded immediately by polling for NFC-A, then the time $\mathbf{PTGT_{A}}$ + $\mathbf{FDT_{A,LISTEN,MAX}}$ MUST be applied.
- If polling for Proprietary Technology is preceded immediately by polling for NFC-B, then the time $\mathbf{PTGT_{B}}$ + $\mathbf{FWT_{SENSB}}$ MUST be applied.
- If polling for Proprietary Technology is preceded immediately by polling for NFC-F, then the time $\mathbf{PTGT_{F}}$ + $\mathbf{FDT_{F,LISTEN,SENSF\_REQ}}$ MUST be applied.

Refer to [DIGITAL] for details regarding $\mathbf{FDT_{A,LISTEN,MAX}}$, $\mathbf{FWT_{SENSB}}$, and $\mathbf{FDT_{F,LISTEN,SENSF\_REQ}}$.

Refer to Appendix B for the values of $\mathbf{PTGT_{A}}$, $\mathbf{PTGT_{B}}$, and $\mathbf{PTGT_{F}}$.

7 Poll Mode – RF Collision Avoidance

Figure 2 shows the flow chart for RF Collision Avoidance that shall be applied by the NFC Forum Device before generating an Operating Field.

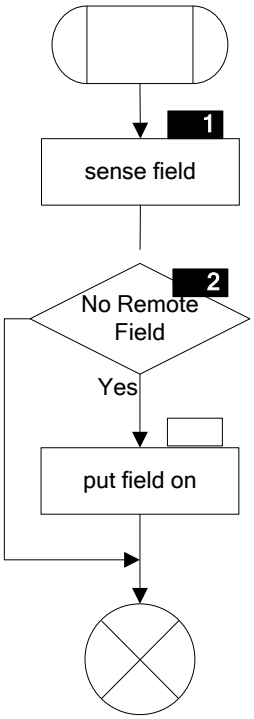

Figure 2: RF Collision Avoidance – Flow Chart

Requirements 22 contains the list of RF Collision Avoidance requirements. Symbols in this section refer to corresponding symbols in Figure 2.

Requirements 22: RF Collision Avoidance

Poll Mode	
7.1.1.1	Symbol 1: The NFC Forum Device MUST check during a time $\mathbf{T_{ID}} + n \times \mathbf{T_{RFW}}$ No Remote Field Sensed. • $\mathbf{T_{ID}}$ MUST be greater than 4096/fc. • $\mathbf{T_{RFW}}$ MUST be equal to 512/fc. • The integer value of $0 \leq n \leq 3$ MUST be randomly generated.
7.1.1.2	Symbol 2: If No Remote Field Sensed, after having listened according to Symbol 1, the NFC Forum Device MUST proceed to Symbol 3. Otherwise, the NFC Forum Device MUST conclude RF Collision Avoidance.
7.1.1.3	Symbol 3: The NFC Forum Device MUST turn the Operating Field to the Operating Field On state, as defined in [ANALOG] and it MUST conclude RF Collision Avoidance.

8 Poll Mode – Activity and Profile Model

Activities combine elementary blocks of [DIGITAL] into functional blocks. Each functional block has a dedicated purpose, with well defined pre-conditions and post-conditions. It provides a level of detail on the Initiator/Reader functionality that is not already specified within [DIGITAL].

The Activity manages the dialogue with another device, using the Commands and Responses specified in [DIGITAL]. To perform its task, it has a well-defined set of algorithms, with one algorithm per Technology if necessary.

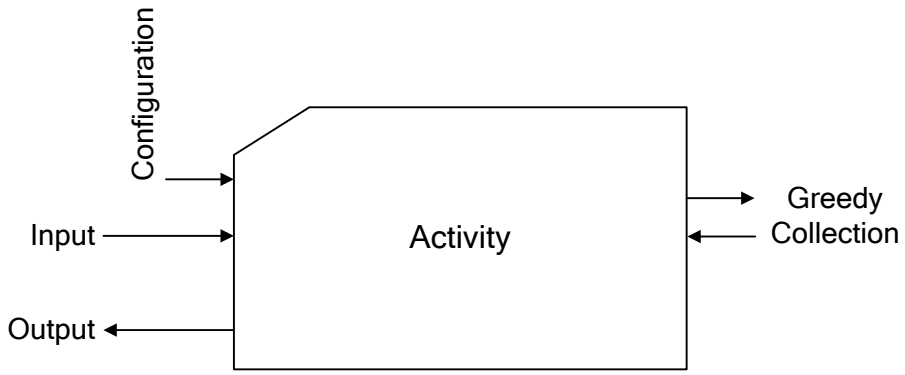

Figure 3: Activity

An Activity may have any of the following interfaces as shown in Figure 3:

- Configuration Parameters
- Input Parameters
- Output Parameters
- Greedy Collection

Configuration Parameters and Input Parameters provide the necessary flexibility on how to use the algorithm. As part of its processing, the Activity collects information on the other device. While this information may not be directly relevant for this Activity, it is stored in the Greedy Collection, so that it can be used by other Activities or the Resolution Process. Output Parameters provide the results of the Activity into the Resolution Process.

Activities are managed by the Resolution Process, which is a decision process controlled by the adjacent upper layer. The scope of the Resolution Process is limited to the identification of and the Input Parameter setting for the next Activity. The other responsibilities of the adjacent upper layer, beyond the Resolution Process (such as controlling the display, collecting user input, performing exception handling, etc.) are outside the scope of this specification.

The following rules for the framework around Activities apply:

- During normal processing, Activities are not interrupted by the adjacent upper layer. If the adjacent upper interrupts an Activity, this is an exception.
- If an error occurs within an action block, then an error-handling task may interrupt the Activity processing. The error-handling task may choose to proceed inside the current Activity or to abort it. Error handling has to conform with [DIGITAL]. Care has to be taken with the integrity of the Greedy Collection.
- The Resolution Process can start an Activity only if the pre-conditions of the Activity are fulfilled.
- The installation of the Resolution Process and the initialization of the needed Configuration Parameters have to be done before any Activity is started.
- The Resolution Process and the Configuration Parameters remain valid as long as a Profile remains active (i.e., until the control is handed back to the adjacent upper layer).

A Profile is comprised of an initialization, a Resolution Process, Activities, the Greedy Collection, and a Clean-up, as shown in Figure 4:

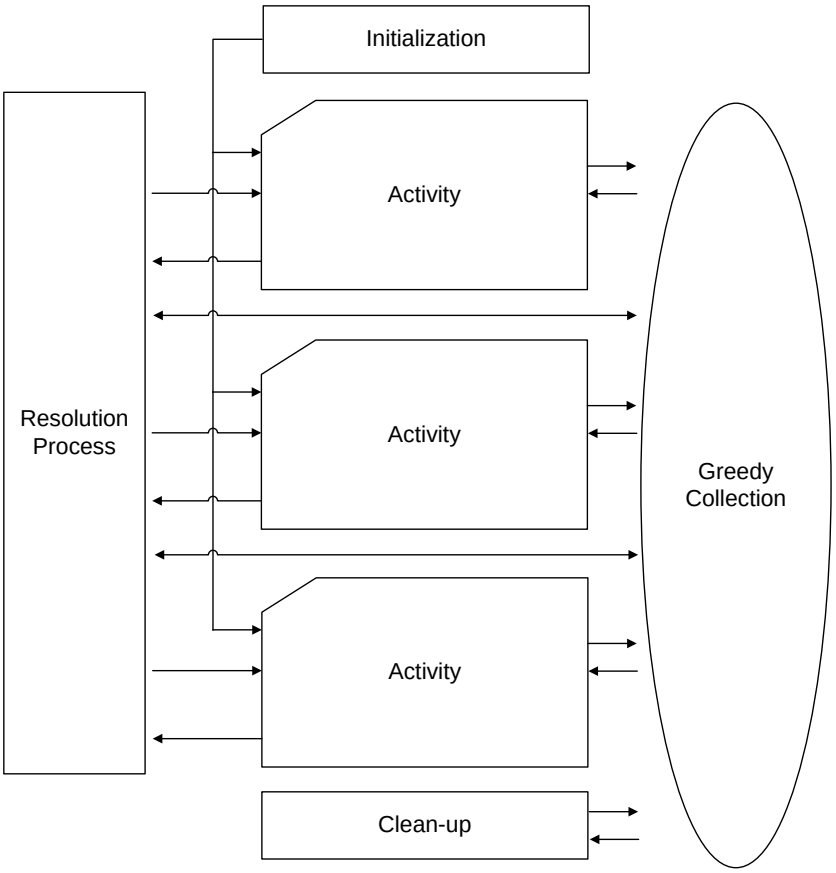

Figure 4: Profile

The Profile is defined by:

- The Resolution Process
- The values chosen for the Configuration Parameters

During the Initialization of a Profile, the Configuration Parameters as needed by the included Activities are set. In the case of a Poll Mode Profile, RF Collision Avoidance takes place (see Section 7).

The Clean-up of a Profile erases the Greedy Collection and, if a Poll Mode Profile, the Operating Field is turned to the Operating Field Off state, in accordance with Requirement 6.1.1.1.

In the absence of user intervention and errors, a Profile describes the deterministic behavior of the included Activities.

The way a Profile unfolds and therefore the order of the Activities that are called depend on the other device(s) encountered.

The Activities defined in this document are contained in Section 9. Building on those Activities, Section 10 defines a set of Profiles covering the NFC Forum communication use cases.

9 Poll Mode – Activities

An Activity uses:

- Technology-independent pre-conditions and post-conditions
- Technology-independent Configuration Parameters, except for the Technology Detection Activity and the Device Activation Activity
- Technology-dependent Algorithms, using the Configuration Parameters in a technology-specific manner

Configuration Parameters are independent from the other device and typically survive multiple transactions. This distinguishes them from the Greedy Collection,which stores information learned from the other device and therefore varies with each transaction.

The description of each Activity is structured as follows:

- The pre-conditions are described by:
  - The input from the Resolution Process
  - The Configuration Parameters
  - The information collected previously in the Greedy Collection
- The post-conditions are described by:
  - The information that can be used by the Resolution Process
  - The information currently in the Greedy Collection
- The algorithm is described through:
  - The flow chart
  - The requirements

The defined Activities can be combined in Profiles (see Section 10).

The remainder of this section lists requirements and contains a detailed definition of each Activity.

9.1 Activities - Requirements

This section contains requirements that must be observed when implementing the Activities described in this document.

Requirements 23: Activities - General

9.1.1.1	For each combination of Activities in Poll Mode, the Operating Field MUST be in the Operating Field On state (see Section 7).
9.1.1.2	For each combination of Activities in Poll Mode, the first Activity MUST be the Technology Detection Activity.

9.2 Technology Detection Activity

This section describes the Technology Detection Activity. The purpose of the Technology Detection Activity is to scan for devices of certain technologies that are within range.

9.2.1 Pre-conditions

The Configuration Parameters for the Technology Detection Activity are listed in Table 8:

Table 8: Technology Detection Activity – Configuration Parameters

Name	Format	Size	Description
CON_POLL_A	binary	1 bit	1b: Poll for NFC-A Technology 0b: Do not poll for NFC-A Technology
CON_POLL_B	binary	1 bit	1b: Poll for NFC-B Technology 0b: Do not poll for NFC-B Technology
CON_POLL_F	binary	1 bit	1b: Poll for NFC-F Technology 0b: Do not poll for NFC-F Technology
CON_POLL_P	binary	1 bit	1b: Poll for Proprietary Technology 0b: Do not poll for Proprietary Technology
CON_BAIL_OUT_A	binary	1 bit	1b: Bail-out after NFC-A 0b: No bail-out after NFC-A
CON_BAIL_OUT_B	binary	1 bit	1b: Bail-out after NFC-B 0b: No bail-out after NFC-B
CON_BITR	Integer	1 Byte	Bit rate for NFC-F 2: 212 kbps 3: 424 kbps

NOTE There is no bail-out option for NFC-F as bail-out is mandatory before polling for a Proprietary Technology and the NFC Forum Device always checks whether an NFC Technology has been detected. The bail-out options for NFC-A and NFC-B are introduced to allow optimization.

There are no Input Parameters requested from the Resolution Process for this Activity.

There is no data needed from the Greedy Collection for this Activity.

9.2.2 Post-conditions

The output of the Technology Detection Activity is listed in Table 9:

Table 9: Technology Detection Activity – Output Parameters

Name	Format	Size	Description
FOUND_A	binary	1 bit	1b: NFC-A Technology found 0b: NFC-A Technology not found
FOUND_B	binary	1 bit	1b: NFC-B Technology found 0b: NFC-B Technology not found
FOUND_F	binary	1 bit	1b: NFC-F Technology found 0b: NFC-F Technology not found

NOTE The outcome of polling for proprietary technology is outside of the scope of this specification and therefore such result does not appear as an Output Parameter.

The data returned to the Greedy Collection is listed in Table 10:

Table 10: Technology Detection Activity – Output into Greedy Collection

Name	Format	Size	Description
GRE_POLL_A[]	array of Byte Sequences	variable	Each element contains a Response to an ALL_REQ or SENS_REQ Command. For NFC-A, the array is limited to one element.
GRE_POLL_B[]	array of Byte Sequences	variable	Each element contains a Response to an ALLB_REQ or SENSB_REQ Command. For NFC-B, the array is limited to one element.
GRE_POLL_F[]	array of Byte Sequences	variable	Each element contains a Response to an SENSF_REQ Command. For NFC-F, the array is limited to four elements.

9.2.3 Flow Chart and Requirements

The NFC Forum Device uses a fixed polling order: NFC-A, NFC-B, NFC-F.

If bail-out is set for a particular Technology, the NFC Forum Device in Poll Mode checks whether this Technology or a Technology polled for earlier has been detected. If so, the NFC Forum Device stops further polling; if not, the NFC Forum Device continues polling for the remaining technologies.

After polling for NFC-F, and therefore, before polling for a Proprietary Technology, the NFC Forum Device always checks whether a Technology has been detected.

Figure 5 shows the processing flow for the NFC Forum Device during the Technology Detection Activity.

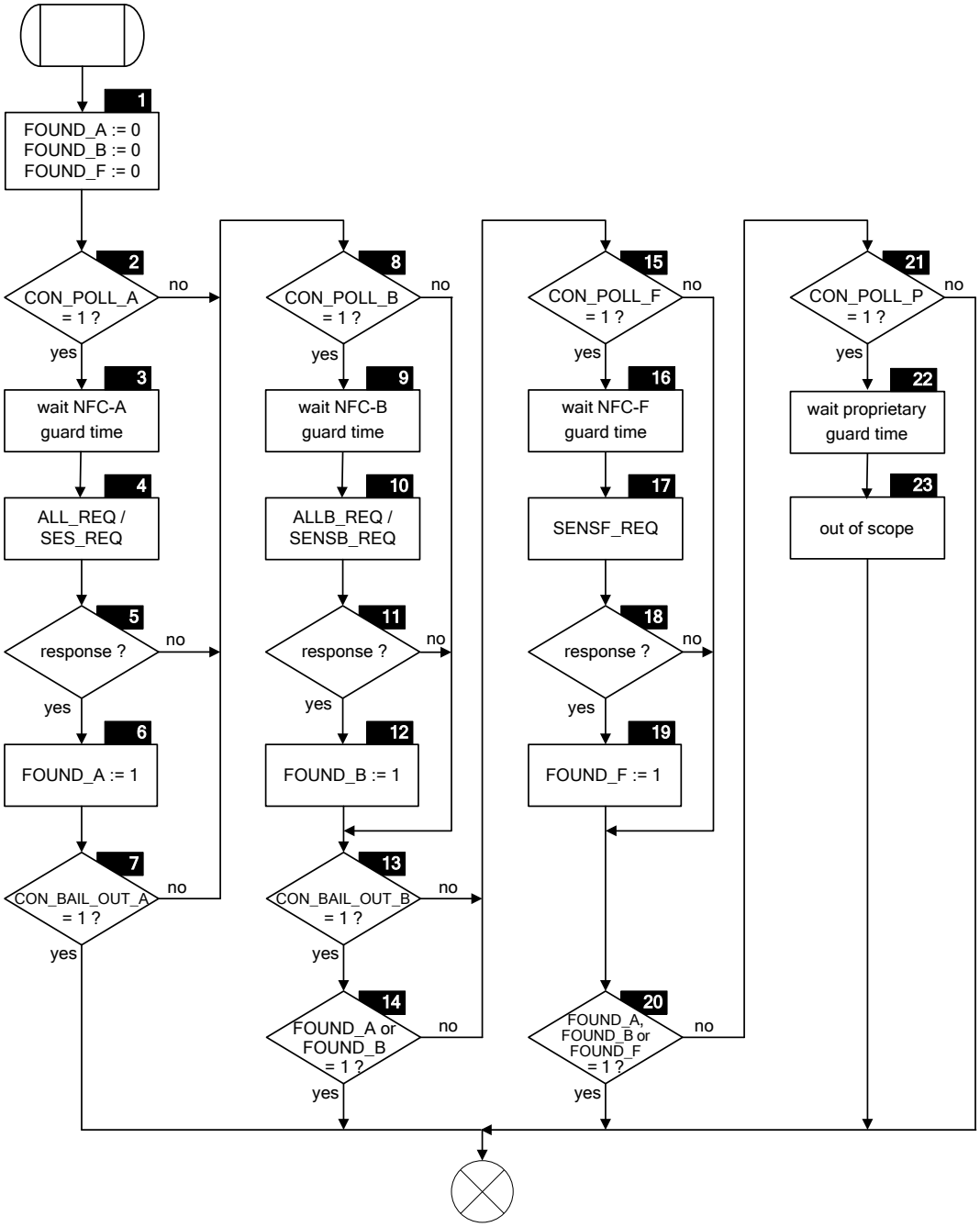

Figure 5: Technology Detection Activity – Flow Chart

Symbols in this section refer to corresponding symbols in Figure 5.

Requirements 24: Technology Detection Activity

Poll Mode	
9.2.3.1	Symbol 1: The NFC Forum Device MUST initialize the following flags to zero: • FOUND_A := 0 • FOUND_B := 0 • FOUND_F := 0
9.2.3.2	Symbol 2: If the NFC Forum Device is configured to poll for NFC-A Technology (i.e., CON_POLL_A = 1), then the NFC Forum Device MUST proceed to Symbol 3. Otherwise, the NFC Forum Device MUST proceed to Symbol 8.
9.2.3.3	Symbol 3: Before proceeding, the NFC Forum Device MUST maintain an Unmodulated Carrier for at least $\mathbf{GT_A}$. Refer to [DIGITAL] for the value of $\mathbf{GT_A}$.
9.2.3.4	Symbol 4: The NFC Forum Device MUST send an ALL_REQ or SENS_REQ Command and it MUST wait for a Response afterward as defined in [DIGITAL].
9.2.3.5	Symbol 5: If the NFC Forum Device does not receive a Response to the ALL_REQ or SENS_REQ Commands, then NFC Forum Device MUST proceed to Symbol 8. Otherwise, the NFC Forum Device MUST store the Response in GRE_POLL_A[] and it MUST proceed to Symbol 6.
9.2.3.6	Symbol 6: The NFC Forum Device MUST set FOUND_A to 1.
9.2.3.7	Symbol 7: If the NFC Forum Device is configured for bail-out upon detection of NFC-A Technology (i.e., CON_BAIL_OUT_A = 1), then the NFC Forum Device MUST conclude the Technology Detection Activity. Otherwise, the NFC Forum Device MUST proceed to Symbol 8.
9.2.3.8	Symbol 8: If the NFC Forum Device is configured to poll for NFC-B Technology (i.e., CON_POLL_B = 1), then the NFC Forum Device MUST proceed to Symbol 9. Otherwise, the NFC Forum Device MUST proceed to Symbol 15.

Poll Mode	
9.2.3.9	Symbol 9: Before proceeding, the NFC Forum Device MUST maintain an Unmodulated Carrier for at least $\mathbf{GT_B}$. Refer to [DIGITAL] for the value of $\mathbf{GT_B}$.
9.2.3.10	Symbol 10: The NFC Forum Device MUST send an ALLB_REQ or a SENSB_REQ Command with number of slots set equal to 1 (N=1) and it MUST wait for a Response afterward as defined in [DIGITAL].
9.2.3.11	Symbol 11: If the NFC Forum Device does not receive a Response to the ALLB_REQ or SENSB_REQ Commands, then the NFC Forum Device MUST proceed to Symbol 13. Otherwise, the NFC Forum Device MUST store the Response in GRE_POLL_B[] and it MUST proceed to Symbol 12.
9.2.3.12	Symbol 12: The NFC Forum Device MUST set FOUND_B to 1.
9.2.3.13	Symbol 13: If the NFC Forum Device is configured for bail-out upon detection of NFC-B Technology (i.e., CON_BAIL_OUT_B = 1), then the NFC Forum Device MUST proceed to Symbol 14. Otherwise, the NFC Forum Device MUST proceed to Symbol 15.
9.2.3.14	Symbol 14: If FOUND_A or FOUND_B has a value equal to 1, the NFC Forum Device MUST conclude the Technology Detection Activity. Otherwise, the NFC Forum Device MUST proceed to Symbol 15.
9.2.3.15	Symbol 15: If the NFC Forum Device is configured to poll for NFC-F Technology (i.e., CON_POLL_F = 1), then the NFC Forum Device MUST proceed to Symbol 16. Otherwise, the NFC Forum Device MUST proceed to Symbol 20.
9.2.3.16	Symbol 16: Before proceeding, the NFC Forum Device MUST maintain an Unmodulated Carrier for at least $\mathbf{GT_F}$. For more details on $\mathbf{GT_F}$, see requirement 6.1.1.3.
9.2.3.17	Symbol 17: The NFC Forum Device MUST send a SENSF_REQ Command with number of slots equal to 4 (TSN = 03h), SC = FFFFh, RC = 00h at the bit rate configured by the CON_BITR and it MUST wait for a Response afterward as defined in [DIGITAL].

Poll Mode	
9.2.3.18	Symbol 18: If the NFC Forum Device does not receive a Response to the SENSF_REQ Command, then the NFC Forum Device MUST proceed to Symbol 20. Otherwise, the NFC Forum Device MUST store the Response(s) in GRE_POLL_F[] and it MUST proceed to Symbol 19.
9.2.3.19	Symbol 19: The NFC Forum Device MUST set FOUND_F to 1.
9.2.3.20	Symbol 20: If FOUND_A or FOUND_B or FOUND_F has a value equal to 1, the NFC Forum Device MUST conclude the Technology Detection Activity. Otherwise, the NFC Forum Device MUST proceed to Symbol 21.
9.2.3.21	Symbol 21: If the NFC Forum Device is configured to poll for a Proprietary Technology (i.e., CON_POLL_P = 1), then the NFC Forum Device MUST proceed to Symbol 22. Otherwise, the NFC Forum Device MUST conclude the Technology Detection Activity.
9.2.3.22	Symbol 22: Before proceeding, the NFC Forum Device MUST maintain an Unmodulated Carrier for a guard time as specified in 6.1.1.2.
9.2.3.23	Symbol 23: *Further processing and output Parameters of proprietary technology is out of scope of this specification.*

9.3 Collision Resolution Activity

This section describes the Collision Resolution Activity.

9.3.1 Pre-conditions

The Configuration Parameters for the Collision Resolution Activity are listed in Table 11:

Table 11: Collision Resolution Activity – Configuration Parameters

Name	Format	Size	Description
CON_DEVICES_LIMIT	Hexadecimal	1 Byte	CON_DEVICES_LIMIT = 00h: No identifier has to be resolved when a collision is detected. CON_DEVICES_LIMIT > 00h: Number of resolved NFCIDx device identifiers beyond which the collision resolution process can stop resolving when collisions are still pending.
CON_ADV_FEAT	Binary	1 bit	0b: Advanced protocol features not activated 1b: Advanced protocol features activated
CON_ANTICOLL	Binary	1 bit	0b: Do not use anti-collision 1b: Use anti-collision

The Input Parameters for the Collision Resolution Activity are listed in Table 12:

Table 12: Collision Resolution Activity – Input Parameters

Name	Format	Size	Description
INT_TECH_SEL	binary	2 bit	00b: Resolve NFC-A Technology 01b: Resolve NFC-B Technology 10b: Resolve NFC-F Technology

The data requested from the Greedy Collection is listed in Table 13:

Table 13: Collision Resolution Activity – Input from Greedy Collection

Name	Format	Size	Description
GRE_POLL_A[]	array of Byte Sequences	variable	Each element contains a Response to an ALL_REQ or SENS_REQ Command. For NFC-A, the array is limited to one element.
GRE_POLL_B[]	array of Byte Sequences	variable	Each element contains a Response to an ALLB_REQ or SENSB_REQ Command. For NFC-B, the array is limited to one element.
GRE_POLL_F[]	array of Byte Sequences	variable	Each element contains a Response to an SENSF_REQ Command. For NFC-F, the array is limited to four elements.

9.3.2 Post-conditions

The Output Parameters returned to the Resolution Process are listed in Table 14:

Table 14: Collision Resolution Activity – Output Parameters

Name	Format	Size	Description
INT_NFCIDX[n], n = 1 to N	array of identifiers	variable	Contains identifiers of the devices resolved. N denotes the number of devices resolved. The size of each identifier is technology dependent.
INT_NFCIDX_SLEEP[n], n = 1 to N	Binary	1 bit	0b: Device not in sleep state 1b: Device in sleep state
INT_COLL_PEND	Binary	1 bit	0b: No collision pending 1b: Collisions pending

The data returned to the Greedy Collection is listed in Table 15:

Table 15: Collision Resolution Activity – Output into Greedy Collection

Name	Format	Size	Description
GRE_SEL_RES[]	array of Byte Sequences	variable	Response of each identified device. Each element contains a SEL_RES Response from an NFC-A device.
GRE_SENSB_RES[]	array of Byte Sequences	variable	Response of each identified device. Each element contains a Response to an ALLB_REQ or SENSB_REQ Command from an NFC-B device.
GRE_SENSF_RES[]	array of Byte Sequences	variable	Response of each identified device. Each element contains a Response to an SENSF_REQ Command from an NFC-F device.

9.3.3 Flow Chart (Normative)

The Collision Resolution Activity to be performed depends on the value of the INT_TECH_SEL parameter and is defined in the normative Figure 6.

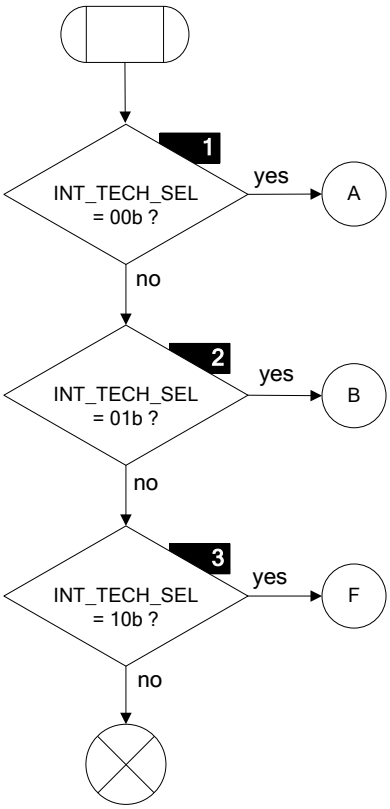

Figure 6: Collision Resolution Activity (Sheet 1, Entry) – Normative Flow Chart

9.3.4 Flow Chart and Requirements for NFC-A

The purpose of the NFC-A-related part of the Collision Resolution Activity is to identify an NFC Forum Device within range that has activated support for NFC-A Technology (subset). The algorithm works as follows:

> The algorithm selects one device after the other. Every time a collision is detected, the algorithm continues with the valid bits of the NFCID1 CLn followed by a 1b. This way, multiple devices can be identified by selecting all cascade levels of one device before restarting the algorithm to select the next device. Before restarting the algorithm, the device identified is sent to **SLEEP_A** Sub-state to exclude it from the remaining collision resolution process.

The NFC Forum Device can be configured to shorten the process by using the CON_DEVICES_LIMIT Configuration Parameters. The CON_DEVICES_LIMIT is used to conclude the NFC-A Collision Resolution Activity after identification of a set number of devices, even if collisions are still pending.

If the CON_DEVICES_LIMIT is set to zero, then collision detection only is performed. That is, if a collision is detected, the NFC Forum Device concludes the NFC-A Collision Resolution Activity indicating a collision without identifying any device.

Figure 7 describes the NFC-A-related part of the Collision Resolution Activity.

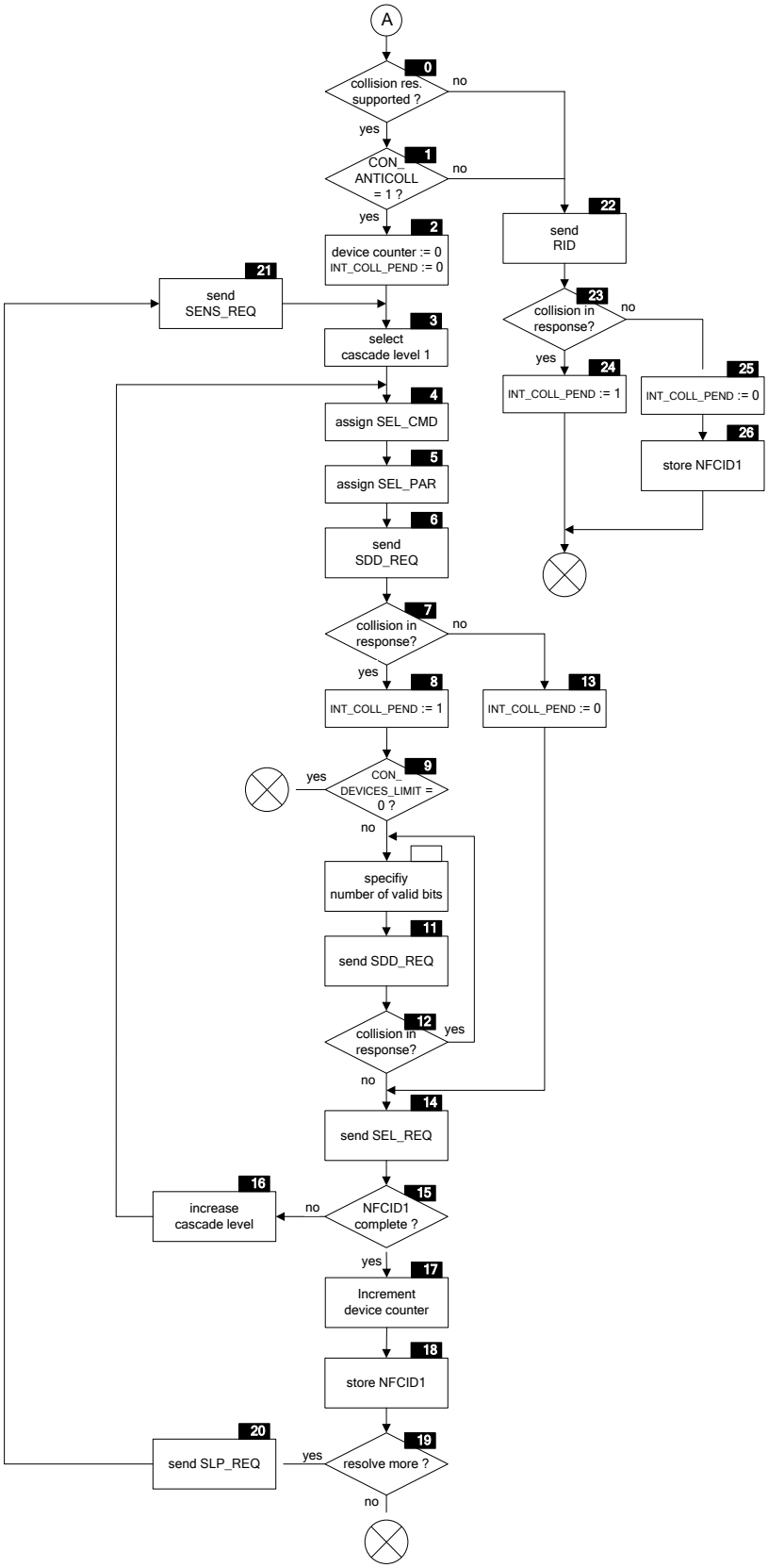

Figure 7: Collision Resolution Activity (Sheet 2, connector A, NFC-A) – Flow Chart

Symbols in this section refer to corresponding symbols in Figure 7.

Requirements 25: Collision Resolution Activity – NFC-A

Poll Mode	
9.3.4.1	Symbol 0: If the SENS_RES is a Valid Response and indicates the bit frame SDD support, the NFC Forum Device MUST proceed to Symbol 1. Otherwise, the NFC Forum Device proceeds with Symbol 22.
9.3.4.2	Symbol 1: If CON_ANTICOLL has a value of 1, the NFC Forum Device MUST proceed to Symbol 2. Otherwise, the NFC Forum Device proceeds with Symbol 22.
9.3.4.3	Symbol 2: The NFC Forum Device MUST initialize the device counter with a value of 0 and INT_COLL_PEND with a value of 0. The NFC Forum Device MUST initialize INT_NFCIDX_SLEEP[] with 0.
9.3.4.4	Symbol 3: The NFC Forum Device MUST select SDD cascade level 1.
9.3.4.5	Symbol 4: The NFC Forum Device MUST assign SEL_CMD with the code for the selected SDD cascade level.
9.3.4.6	Symbol 5: The NFC Forum Device MUST set SEL_PAR to the value of 20h, indicating that no data bits are following.
9.3.4.7	Symbol 6: The NFC Forum Device MUST send the SDD_REQ Command. Refer to [DIGITAL] for the coding of the SDD_REQ Command.
9.3.4.8	Symbol 7: If the NFC Forum Device detects a Collision in the Response to the SDD_REQ Command, the NFC Forum Device MUST proceed to Symbol 8. Otherwise, the NFC Forum Device MUST proceed to Symbol 13.
9.3.4.9	Symbol 8: The NFC Forum Device MUST set INT_COLL_PEND to a value of 1 to indicate a pending collision.

Poll Mode	
9.3.4.10	Symbol 9: If the CON_DEVICES_LIMIT has a value of 0, then the NFC Forum Device MUST conclude the NFC-A Collision Resolution Activity (i.e., the NFC Forum Device is configured to perform collision detection only). Otherwise, the NFC Forum Device MUST proceed to Symbol 10.
9.3.4.11	Symbol 10: The NFC Forum Device MUST set SEL_PAR to a value that specifies the number of valid bits of NFCID1 CL*n*. The valid bits are part of the NFCID1 CL*n* that was received before a collision occurred, followed by 1b (i.e., the position of the first collision in the Response to the previous SDD_REQ Command is set to 1b).
9.3.4.12	Symbol 11: The NFC Forum Device MUST send the SDD_REQ Command including the data bits as indicated by SEL_PAR.
9.3.4.13	Symbol 12: If the NFC Forum Device detects a Collision in the Response to the SDD_REQ Command, the NFC Forum Device MUST proceed to Symbol 10. Otherwise, the NFC Forum Device MUST proceed to Symbol 14.
9.3.4.14	Symbol 13: The NFC Forum Device MUST reset INT_COLL_PEND to a value of 0 and proceed to Symbol 14.
9.3.4.15	Symbol 14: The NFC Forum Device MUST send the SEL_REQ Command. Refer to [DIGITAL] for the coding of the SEL_REQ Command.
9.3.4.16	Symbol 15: The NFC Forum Device MUST check the cascade tag of the SEL_RES Response. If the cascade tag indicates that NFCID1 is complete, then the NFC Forum Device MUST proceed to Symbol 17. Otherwise, the NFC Forum Device MUST proceed to Symbol 16.
9.3.4.17	Symbol 16: The NFC Forum Device MUST increase the cascade level. The NFC Forum Device MUST proceed to Symbol 4.
9.3.4.18	Symbol 17: The NFC Forum Device MUST increment the device counter by 1.
9.3.4.19	Symbol 18: The NFC Forum Device MUST store the SEL_RES Response in GRE_SEL_RES[] and it MUST store the NFCID1 identifier in INT_NFCIDX[device counter-1].

Poll Mode	
9.3.4.20	Symbol 19: If INT_COLL_PEND has a value of 1 **and** the device counter is lower than the CON_DEVICES_LIMIT, then the NFC Forum Device MUST proceed to Symbol 20. Otherwise, the NFC Forum Device MUST conclude the NFC-A Collision Resolution Activity.
9.3.4.21	Symbol 20: The NFC Forum Device MUST send a SLP_REQ Command to put the device with identifier INT_NFCIDX[device counter - 1] in the **SLEEP_A** Sub-state and it MUST memorize the information that a SLP_REQ Command has been sent to the device by setting INT_NFCIDX_SLEEP[device counter - 1] equal to 1.
9.3.4.22	Symbol 21: The NFC Forum Device MUST send the SENS_REQ Command and it MUST wait for the SENS_RES Response afterward, as specified in [DIGITAL]. The NFC Forum Device MUST proceed to Symbol 3.
9.3.4.23	Symbol 22: The NFC Forum Device sends the RID Command as indicated in [DIGITAL].
9.3.4.24	Symbol 23: If the NFC Forum Device detects a Collision in the Response to the RID, the NFC Forum Device MUST proceed to Symbol 24. Otherwise, the NFC Forum Device MUST proceed to Symbol 25.
9.3.4.25	Symbol 24: The NFC Forum Device MUST set INT_COLL_PEND to 1b and conclude the NFC-A Collision Resolution Activity.
9.3.4.26	Symbol 25: The NFC Forum Device MUST set INT_COLL_PEND to 0b.
9.3.4.27	Symbol 26: The NFC Forum Device MUST increment the device counter by 1 and store the RID Response, including identifier UID0…UID3 in INT_NFCIDX[device counter-1], and conclude the NFC-A Collision Resolution Activity.

9.3.5 Flow Chart and Requirements for NFC-B

The purpose of the NFC-B-related part of the Collision Resolution Activity is to identify an NFC Forum Device within range that has activated support for NFC-B Technology. The algorithm works as follows:

If the Technology Detection resulted in a Valid SENSB_RES Response (i.e., no collisions), then the NFC Forum Device extracts the identifier and stores it in INT_NFCIDX[].If there is just one device detected or just one device is resolved, than the device is left in the **READY_B_DECL** Sub-state.

If the Technology Detection resulted in an invalid SENSB_RES Response (i.e., collisions), then the NFC Forum Device polls with the number of timeslots set to 1. The NFC Forum Device saves each Valid Response to a SENSB_REQ or SLOT_MARKER in GRE_SENSB_RES[]. Each Valid Response results in an identifier that is stored in INT_NFCIDX[] and each device identified is subsequently put in the **SLEEP_B** Sub-state, except the last resolved device (it stays in the **READY_B_DECL** Sub-state).

As long as collisions occur and no device has been identified yet, the NFC Forum Device increments the number of time slots and sends new SENSB_REQ Commands. If there are still collisions after having completed the collision resolution with the maximum number of time slots, no further attempt is made to isolate the identifiers.

When at least one device has already been identified, the number of slots is not further incremented.

The NFC Forum Device can be configured to shorten the process by using the CON_DEVICES_LIMIT parameter. The parameter is used to conclude the NFC-B Collision Resolution Activity after identification of a set number of devices, even if collisions are still pending.

If this parameter is set to zero, then collision detection only is performed. That is, if a collision is detected, the NFC Forum Device concludes the NFC-B Collision Resolution Activity.

NOTE In this version of the document, NFC Forum advanced protocol features are not supported, and therefore, the NFC Forum Device only polls for devices not supporting NFC Forum advanced protocol features.

Figure 8 describes the NFC-B-related part of the Collision Resolution Activity.

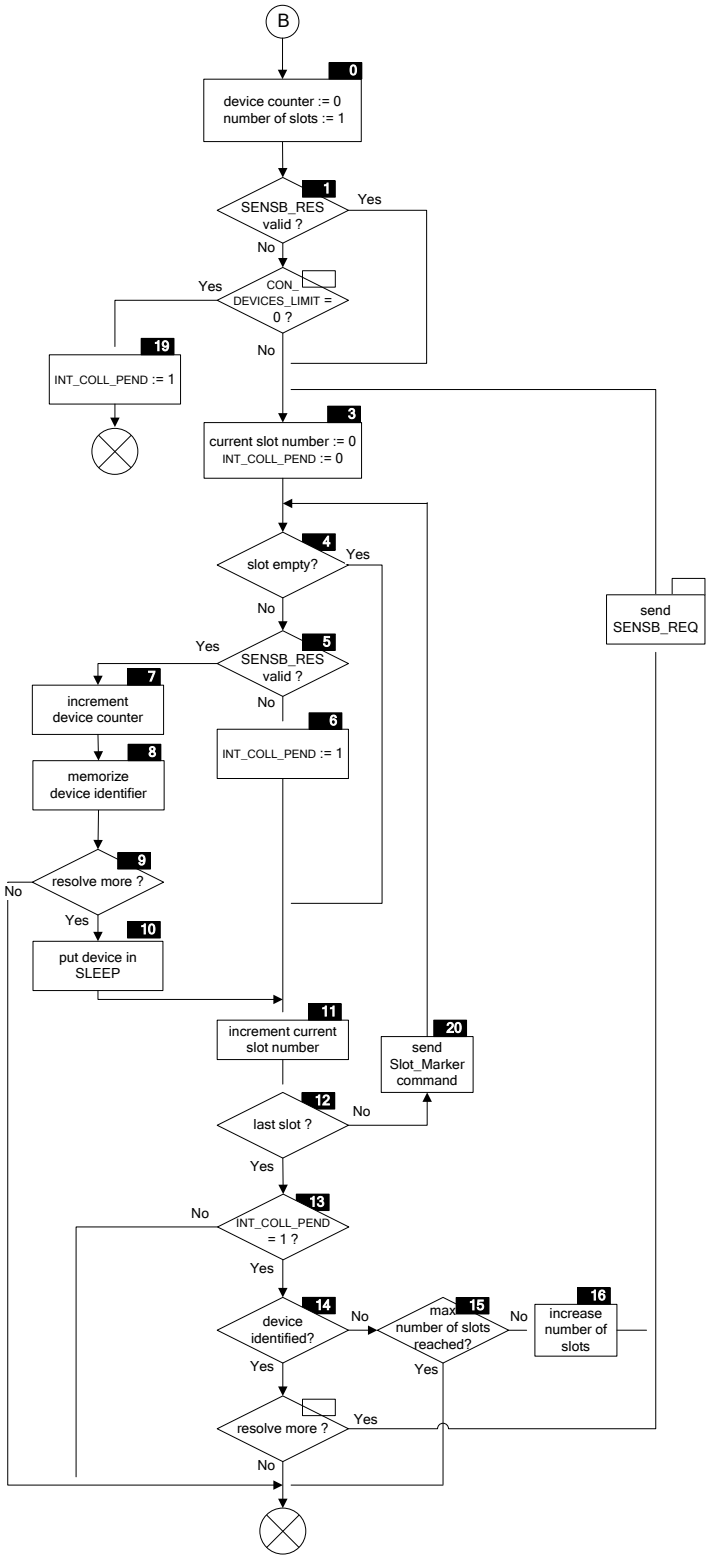

Figure 8: Collision Resolution Activity (Sheet 3, connector B, NFC-B) – Flow Chart

Symbols in this section refer to corresponding symbols in Figure 8.

Requirements 26: Collision Resolution Activity – NFC-B

Poll Mode	
9.3.5.1	Symbol 0: The NFC Forum Device MUST assign a parameter containing the device counter and it MUST initialize this parameter with 0. The NFC Forum Device MUST assign a parameter containing the number of slots and it MUST initialize this parameter with 1. The NFC Forum Device MUST initialize INT_NFCIDX_SLEEP[] with 0.
9.3.5.2	Symbol 1: The NFC Forum Device MUST read GRE_POLL_B[1], containing the most recent SENSB_RES Response. If the SENSB_RES Response is Valid, then the NFC Forum Device MUST proceed to Symbol 3. Otherwise, the NFC Forum Device MUST proceed to Symbol 2.
9.3.5.3	Symbol 2: If the CON_DEVICES_LIMIT has a value of 0 (i.e., the NFC Forum Device is configured to perform collision detection only), then the NFC Forum Device MUST proceed to Symbol 19. Otherwise, the NFC Forum Device MUST proceed to Symbol 3.
9.3.5.4	Symbol 3: The NFC Forum Device MUST assign a parameter containing the current slot number and it MUST initialize this parameter with 0. The NFC Forum Device MUST initialize INT_COLL_PEND with 0.
9.3.5.5	Symbol 4: If the NFC Forum Device did not receive a Response in the slot corresponding to the current slot number, then the NFC Forum Device MUST proceed to Symbol 11. Otherwise, the NFC Forum Device MUST proceed to Symbol 5.
9.3.5.6	Symbol 5: If the last SENSB_RES Response that the NFC Forum Device has memorized is Valid, then the NFC Forum Device MUST proceed to Symbol 7. Otherwise, the NFC Forum Device MUST proceed to Symbol 6.
9.3.5.7	Symbol 6: The NFC Forum Device MUST set INT_COLL_PEND to 1. The NFC Forum Device MUST proceed to Symbol 11.
9.3.5.8	Symbol 7: The NFC Forum Device MUST increment the device counter.

Poll Mode	
9.3.5.9	Symbol 8: The NFC Forum Device MUST store the NFCID0 identifier to INT_NFCIDX[device counter-1].
9.3.5.10	Symbol 9: If the device counter is lower than the CON_DEVICES_LIMIT, then the NFC Forum Device MUST proceed to Symbol 10. Otherwise, the NFC Forum Device MUST conclude the NFC-B Collision Resolution Activity.
9.3.5.11	Symbol 10: The NFC Forum Device MUST send a SLPB_REQ Command to put the device resolved in the **SLEEP_B** Sub-state and it MUST set INT_NFCIDX_SLEEP[device counter-1] equal to 1.
9.3.5.12	Symbol 11: The NFC Forum Device MUST increment the current slot number, indicating the current slot in which to receive SENSB_RES Responses.
9.3.5.13	Symbol 12: If the current slot number is equal to the last slot, then the NFC Forum Device MUST proceed to Symbol 13. Otherwise, the NFC Forum Device MUST proceed to Symbol 20.
9.3.5.14	Symbol 13: If INT_COLL_PEND has a value of 1, then the NFC Forum Device MUST proceed to Symbol 14. Otherwise, the NFC Forum Device MUST conclude the NFC-B Collision Resolution Activity.
9.3.5.15	Symbol 14: If subsequent to the last SENSB_REQ Command, the NFC Forum Device resolved an identifier of a responding device (i.e., the identifier of the responding device has been memorized), then the NFC Forum Device MUST proceed to Symbol 17. Otherwise (i.e., no identifier was resolved), the NFC Forum Device MUST proceed to Symbol 15.
9.3.5.16	Symbol 15: If the number of slots is equal to the maximum value allowed, then the NFC Forum Device MUST conclude the NFC-B Collision Resolution Activity. Otherwise, the NFC Forum Device MUST proceed to Symbol 16. The maximum value allowed for the number of slots is specified in [DIGITAL] within the SENSB_REQ Command.

Poll Mode	
9.3.5.17	Symbol 16: The NFC Forum Device MUST increase the number of slots to the next value allowed. The values allowed for the number of slots are specified in [DIGITAL], within the SENSB_REQ Command. The NFC Forum Device MUST proceed to Symbol 18.
9.3.5.18	Symbol 17: If the device counter is lower than the CON_DEVICES_LIMIT, then the NFC Forum Device MUST proceed to Symbol 18. Otherwise, the NFC Forum Device MUST conclude the NFC-B Collision Resolution Activity.
9.3.5.19	Symbol 18: The NFC Forum Device MUST send a SENSB_REQ Command, MUST wait for the SENSB_RES Response afterward as specified in [DIGITAL], and it MUST proceed to Symbol 4. The NFC Forum Device MUST proceed to Symbol 3.
9.3.5.20	Symbol 19: The NFC Forum Device MUST set INT_COLL_PEND to 1 and it MUST conclude the NFC-B Collision Resolution Activity.
9.3.5.21	Symbol 20: The NFC Forum Device MUST send a SLOT_MARKER Command indicating the current slot. The NFC Forum Device MUST proceed to Symbol 4.

9.3.6 Flow Chart and Requirements for NFC-F

The purpose of the NFC-F-related part of the Collision Resolution Activity is to identify an NFC Forum Device that has activated support for NFC-F Technology (subset). The algorithm works as follows:

> The NFC Forum Device retrieves the number of devices that already have been identified. If this number is lower than the value of CON_DEVICES_LIMIT, then the NFC Forum Device polls again by sending a SENSF_REQ Command with the maximum number of time slots set.

Figure 9 describes the NFC-F related part of the Collision Resolution Activity.

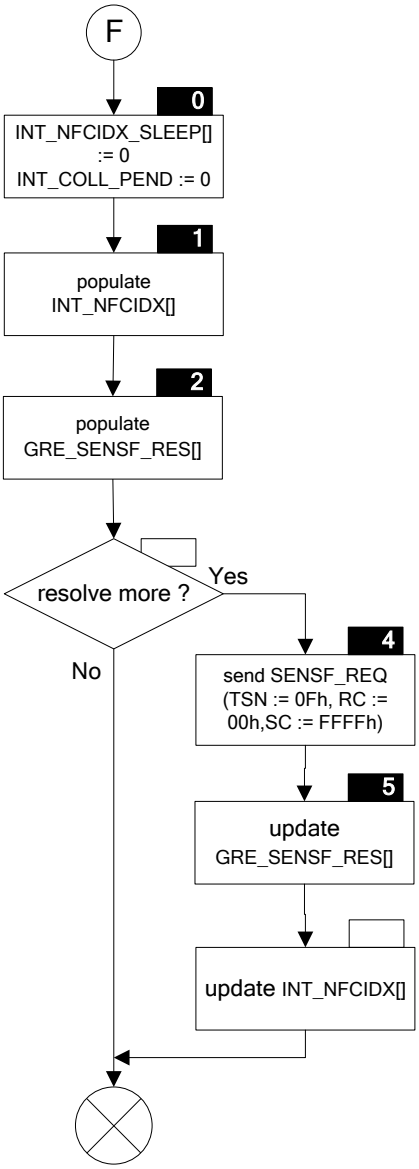

Figure 9: Collision Resolution Activity (Sheet 4, connector F, NFC-F) – Flow Chart

Symbols in this section refer to corresponding symbols in Figure 9.

Requirements 27: Collision Resolution Activity – NFC-F

Poll Mode	
9.3.6.1	Symbol 0: The NFC Forum Device MUST set INT_COLL_PEND to 0 and it MUST initialize INT_NFCIDX_SLEEP[] with 0.
9.3.6.2	Symbol 1: The NFC Forum Device MUST assign a parameter device counter and it MUST initialize this parameter with 0. The NFC Forum Device MUST read GRE_POLL_F[], which contains the SENSF_RES Response(s) to the preceding SENSF_REQ Commands. For each Valid SENSF_RES Response, the NFC Forum Device MUST increment the device counter by 1, it MUST extract the NFCID2, and it MUST store it in INT_NFCIDX[device counter].
9.3.6.3	Symbol 2: The NFC Forum Device MUST copy each Valid SENSF_RES Response contained in GRE_POLL_F[] into GRE_SENSF_RES[].
9.3.6.4	Symbol 3: If the value of device counter (the number of Valid SENSF_RES Responses retrieved from Greedy Collection) is lower than the value of the CON_DEVICES_LIMIT parameter, the NFC Forum Device MUST proceed to Symbol 4. Otherwise, the NFC Forum Device MUST conclude the NFC-F Collision Resolution Activity.
9.3.6.5	Symbol 4: The NFC Forum Device MUST send a SENSF_REQ Command with TSN set to 0fh, RC set to 00h and SC set to FFFFh and it MUST wait for a Response afterward as defined in [DIGITAL].
9.3.6.6	Symbol 5: The NFC Forum Device MUST remove all entries from GRE_SENSF_RES[] and then store any Valid SENSF_RES Response(s) received during processing of Symbol 4 in GRE_SENSF_RES[].
9.3.6.7	Symbol 6: The NFC Forum Device MUST remove all entries from INT_NFCIDX[]. Then, the NFC Forum Device MUST extract the NFCID2 for each entry in GRE_SENSF_RES[] and it MUST store NFCID2 in INT_NFCIDX[]. Afterward, the NFC Forum Device MUST conclude the NFC-F Collision Resolution Activity.

9.4 Device Activation Activity

This section describes the Device Activation Activity.

The Device Activation Activity activates one device out of the set of devices identified during Technology Detection Activity and Collision Resolution Activity. The resolution process decides which device to activate.

9.4.1 Pre-conditions

The Configuration Parameters for the Device Activation Activity are listed in Table 16:

Table 16: Device Activation Activity – Configuration Parameters

Name	Format	Size	Description
CON_ATR	Hexadecimal	3 Bytes	ATR_REQ Command parameter - Refer to [DIGITAL] (Byte 13 of ATR_REQ) for the coding of Byte 1. - Refer to [DIGITAL] (Byte 14 of ATR_REQ) for the coding of Byte 2. - Refer to [DIGITAL] (Byte 15 of ATR_REQ) for the coding of Byte 3. - Refer to [DIGITAL] (Byte 16 of ATR_REQ) for the coding of Byte 4.
CON_GB	Hexadecimal	n Bytes	General bytes of the ATR_REQ or Higher Layer INF of ATTRIB Refer to [DIGITAL] Byte 17+n of ATR_REQ and [DIGITAL] Byte 10+n for ATTRIB. For the ATR_REQ, these bytes contain the General Bytes (**G_T0**…**G_Tn**) as information for LLCP. For ATTRIB, these bytes contain High Layer INF.
CON_RATS	Hexadecimal	1 Byte	RATS Command Parameters Refer to [DIGITAL] (Byte 2 of RATS Command) for the coding of Byte 1.

Name	Format	Size	Description
CON_ATTRIB	hexadecimal	3 Bytes	ATTRIB Command Parameters - Refer to [DIGITAL] (Byte 6 of ATTRIB Command) for the coding of Byte 1. - Refer to [DIGITAL] (Byte 7 of ATTRIB Command) for the coding of Byte 2. - Refer to [DIGITAL] (Byte 8 of ATTRIB Command) for the coding of Byte 3. - Refer to [DIGITAL] (Byte 9 of ATTRIB Command) for the coding of Byte 4.
CON_BITR_NFC_DEP	Integer	1 Byte	Desired Bit rate - 0: maintain the bit rate - 1: 106 kbps - 2: 212 kbps - 3: 424 kbps

The Input Parameters for the Device Activation Activity are listed in Table 17:

Table 17: Device Activation Activity – Input Parameters

Name	Format	Size	Description
INT_TECH_SEL	binary	2 bit	Technology to activate - 00b: NFC-A Technology - 01b: NFC-B Technology - 10b: NFC-F Technology
INT_INDEX	Integer	1 Byte	Contains index to the identifier of the device to be activated
INT_PROTOCOL	Binary	3 bit	Protocol of device to be activated - 000b: Use NFC-DEP - 001b: Use ISO-DEP - 010b: Use Type 1 Tag Platform - 011b: Use Type 2 Tag Platform - 100b: Use Type 3 Tag Platform

NOTE Use of Type 4 Tag Platform is covered by use of ISO-DEP.

The data requested from the Greedy Collection is listed in Table 18:

Table 18: Device Activation Activity – Input from Greedy Collection

Name	Format	Size	Description
GRE_SEL_RES[]	array of Byte Sequences	variable	Response of each identified device. Each element contains a SEL_RES Response from an NFC-A device.
GRE_SENSB_RES[]	array of Byte Sequences	variable	Response of each identified device. Each element contains a Response to an ALLB_REQ or SENSB_REQ Command from an NFC-B device.
GRE_SENSF_RES[]	array of Byte Sequences	variable	Response of each identified device. Each element contains a Response to an SENSF_REQ Command from an NFC-F device.

9.4.2 Post-conditions

The Output Parameters returned to the Resolution Process are listed in Table 19:

Table 19: Device Activation Activity – Output Parameters

Name	Format	Size	Description
INT_INDEX	Integer	1 Byte	Index to the identifier of the device activated
CON_BITR_NFC_DEP	Integer	1 Byte	Current Bitrate in case of NFC_DEP activation: - 0: maintain bit rate - 1: 106 kbps - 2: 212 kbps - 3: 424 kbps

The data returned to the Greedy Collection is listed in Table 20:

Table 20: Device Activation Activity – Output into Greedy Collection

Name	Format	Size	Description
GRE_ATR	hexadecimal	≥ 17 Bytes	ATR_RES Response of device activated
GRE_RATS	hexadecimal	≥ 2 Bytes	RATS Response of device activated
GRE_ATTRIB	hexadecimal	≥ 1 Byte	ATTRIB Response of device activated

NOTE There is no Greedy Collection for the Type 1 Tag Platform or Type 2 Tag Platform:

NOTE For the Type 1 Tag Platform, the result of the RID Command is captured in the NFCID, as part of the Collision Resolution Activity.

NOTE For the Type 2 Tag Platform, the outcome of the device activation (by means of a Valid READ or WRITE Command) is part of the Data Exchange Activity.

9.4.3 Flow Chart (Normative)

The Device Activation Activity to be performed depends on the value of the INT_TECH_SEL parameter and is defined in the normative Figure 10.

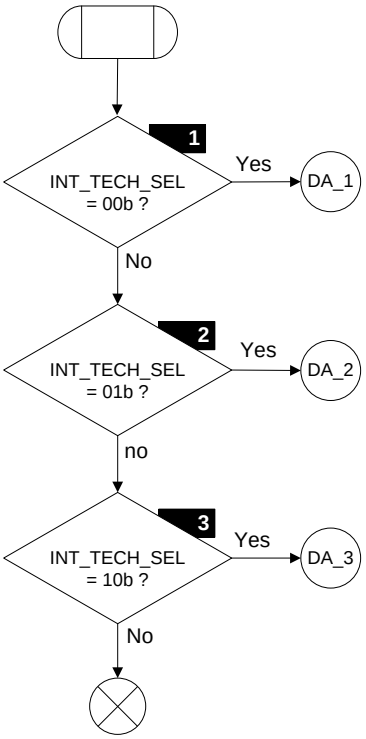

Figure 10: Device Activation Activity (Sheet 1, Entry) – Normative Flow Chart

9.4.4 Flow Chart and Requirements for NFC-A

The purpose of the NFC-A-related part of the Device Activation Activity is to activate an NFC Forum Device within range that has activated support for NFC-A Technology (subset). Depending on the outcome of the Resolution Process of the previous Activity, the device to be activated supports NFC-DEP Protocol, Type 4A Tag Platform, Type 2 Tag Platform, or Type 1 Tag Platform.

Figure 11 illustrates the NFC-DEP Protocol (NFC-A), Type 4A Tag Platform, Type 2 Tag Platform, and Type 1 Tag Platform related parts of the Activation Activity.

NOTE There is no specific action for the Type 1 Tag Platform because this platform is activated implicitly upon completion of the NFC-A Collision Resolution Activity. For the same reason, there is no specific action for the Type 2 Tag Platform, unless it is in the SLEEP_A Sub-state.

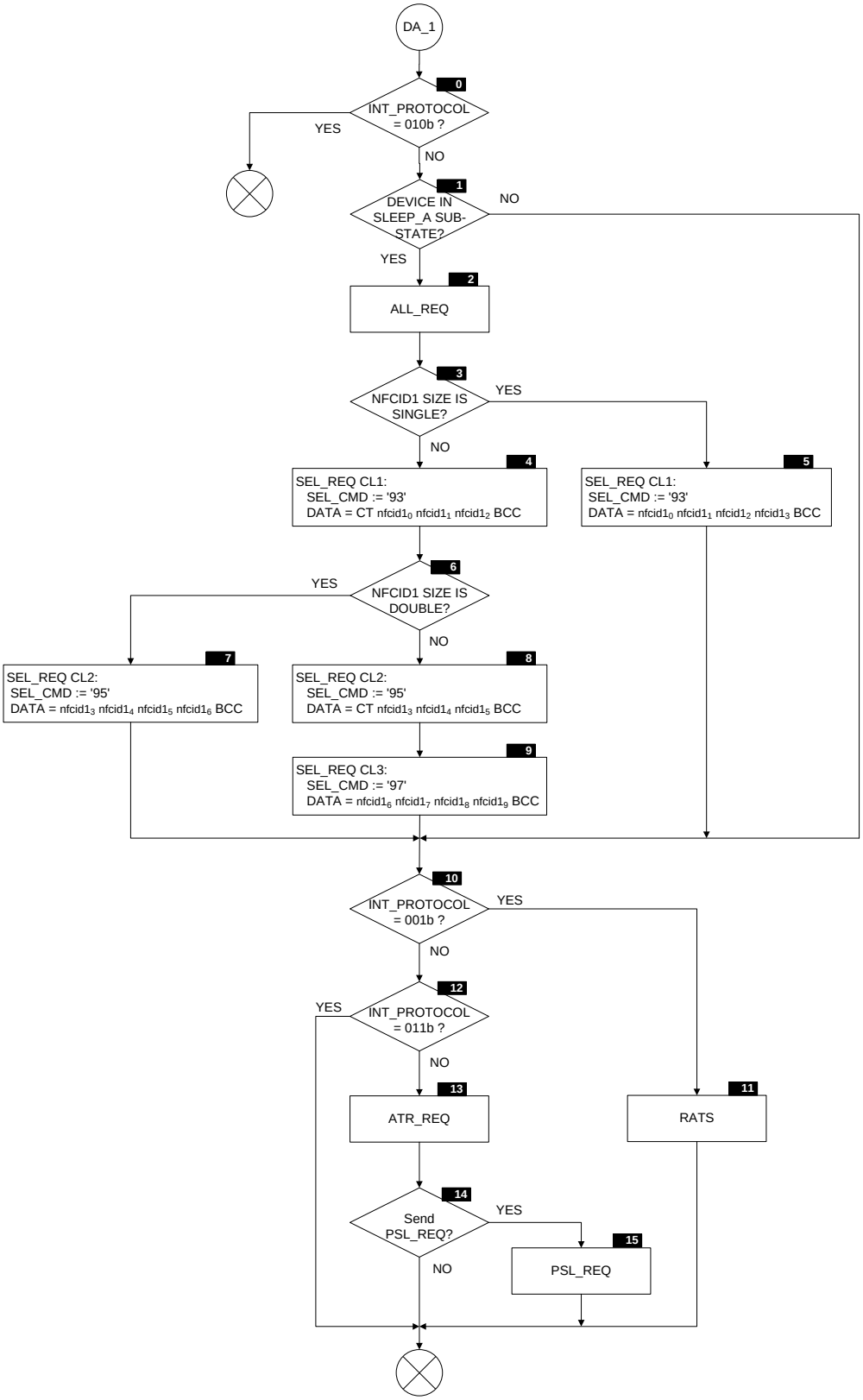

Figure 11: Device Activation Activity (Sheet 2, Connector DA_1, NFC-DEP (NFC-A), Type 1, 2 & 4A Tag Platform) – Flow Chart

Symbols in this section refer to corresponding symbols in Figure 11.

Requirements 28: Device Activation Activity – NFC-DEP (NFC-A), Type 1, 2, & 4A Tag Platform

Poll Mode	
9.4.4.1	Symbol 0: If INT_PROTOCOL is equal to 010b, then the NFC Forum Device MUST conclude the Activation Activity.
9.4.4.2	Symbol 1: If INT_NFCIDX_SLEEP[INT_INDEX] is equal to 1b (i.e., the device is in **SLEEP_A** Sub-state), then the NFC Forum Device MUST proceed to Symbol 2. Otherwise, the NFC Forum Device MUST proceed to Symbol 10.
9.4.4.3	Symbol 2: The NFC Forum Device MUST send an ALL_REQ Command.
9.4.4.4	Symbol 3: If the SENS_RES indicates a single size NFCID1, then the NFC Forum Device MUST proceed to Symbol 5. Otherwise, the NFC Forum Device MUST proceed to Symbol 4.
9.4.4.5	Symbol 4: If INT_NFCIDX [INT_INDEX] indicates a double- or triple-size NFCID1, then the NFC Forum Device MUST first select cascade level 1 by sending a SEL_REQ Command with SEL_CMD = 93h and NFCID1 CL1, before continuing with cascade level 2. The NFC Forum Device MUST proceed to Symbol 6.
9.4.4.6	Symbol 5: The NFC Forum Device MUST send a SEL_REQ Command with SEL_CMD = 93h and NFCID1 CL1 (of INT_NFCIDX [INT_INDEX]).
9.4.4.7	Symbol 6: If INT_NFCIDX[INT_INDEX] indicates a double-size NFCID1, then the NFC Forum Device MUST proceed to Symbol 7. Otherwise, the NFC Forum Device MUST proceed to Symbol 8.
9.4.4.8	Symbol 7: The NFC Forum Device MUST send a SEL_REQ Command with SEL_CMD = 95h and NFCID1 CL2 (of INT_NFCIDX [INT_INDEX]). The NFC Forum Device MUST proceed to Symbol 10.

Poll Mode	
9.4.4.9	Symbol 8: If INT_NFCIDX[INT_INDEX] indicates a triple-size NFCID1, then the NFC Forum Device MUST first select cascade level 2 by sending a SEL_REQ Command with SEL_CMD= 95h and NFCID1 CL2, before continuing with cascade level 3. Refer to [DIGITAL] for SENS_RES coding.
9.4.4.10	Symbol 9: The NFC Forum Device MUST send a SEL_REQ Command with SEL_CMD = 97h and NFCID1 CL3 (of INT_NFCIDX [INT_INDEX]).
9.4.4.11	Symbol 10: If INT_PROTOCOL is equal to 001b, then the NFC Forum Device MUST proceed to Symbol 11. Otherwise, the NFC Forum Device MUST proceed to Symbol 12.
9.4.4.12	Symbol 11: The NFC Forum Device MUST send a RATS Command as specified in [DIGITAL], containing the CON_RATS. The NFC Forum Device MUST handle the RATS Response as specified in [DIGITAL]. If a Valid RATS Response is received, the NFC Forum Device MUST store the RATS Response to GRE_RATS and it MUST conclude the NFC-A Activation Activity.
9.4.4.13	Symbol 12: If INT_PROTOCOL is equal to 011b, then the NFC Forum Device MUST conclude the NFC-A Activation Activity. Otherwise, the NFC Forum Device MUST proceed to Symbol 13.
9.4.4.14	Symbol 13: The NFC Forum Device MUST send an ATR_REQ Command as specified in [DIGITAL], containing the identifier INT_NFCIDX [INT_INDEX]. The NFC Forum Device MUST handle the ATR_RES Response as specified in [DIGITAL]. If a Valid ATR_RES Response is received, the NFC Forum Device MUST • Set INT_NFCIDX_SLEEP[INT_INDEX] equal to 0b • Store the ATR_RES Response to GRE_ATR • Conclude the NFC-A Activation Activity

Poll Mode
9.4.4.15 Symbol 14: The NFC Forum Device MUST proceed to Symbol 15 if the following conditions apply: • PSL_ REQ is supported • CON_BITR_NFC_DEP is equal to or larger than 2 • The device identified by INT_INDEX is the only device that the NFC Forum Device activates during execution of the active Profile Otherwise, the NFC Forum Device MUST conclude the NFC-A Activation Activity. *The NFC Forum Device MAY also proceed to Symbol 15 if it wants to change the Length Reduction Values by using the FSL parameter of PSL_REQ as defined in [DIGITAL].*
9.4.4.16 Symbol 15: The NFC Forum Device MUST send a PSL_REQ. • If CON_BITR_NFC_DEP is equal to 2, then the NFC Forum Device MUST set DSI equal to 001b. • If CON_BITR_NFC_DEP is equal to or larger than 3, then the NFC Forum Device MUST set DSI equal to 010b. The PSL_REQ Command MUST be coded as specified in [DIGITAL]. The NFC Forum Device MUST handle the PSL_REQ Response as specified in [DIGITAL]. If a Valid PSL_RES Response is received, the NFC Forum Device MUST: • Set CON_BITR_NFC_DEP according to the Bitrate specified by the DSI parameter of PSL_REQ • Conclude the NFC-A Activation Activity

NOTE For activation of a Type 2 Tag Platform, the NFC Forum Device send a Valid Read or Write Command in compliance with the Type 2 Tag Platform as specified in [DIGITAL], handles the Response as specified in [DIGITAL], and concludes NFC-A Device Activation Activity.

NOTE If DSI has been set to 001 or 010b and a valid PSL_RES Response has been received, the further communication uses NFC-F technology.

9.4.5 Flow Chart and Requirements for NFC-B

The purpose of the NFC-B Device Activation Activity is to activate an NFC Forum Device within range that has activated support for the Type 4B Tag Platform.

Figure 12 illustrates the Type 4B Tag Platform related part of the Activation Activity.

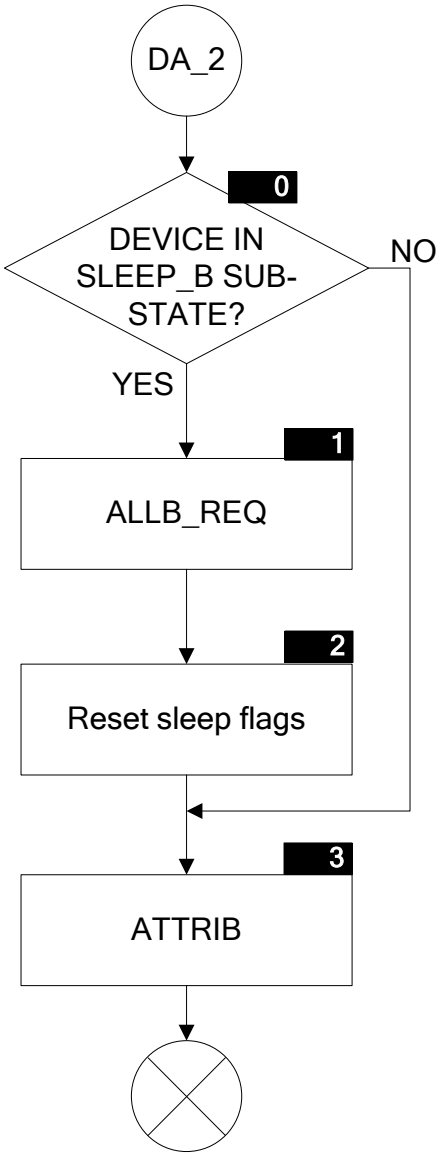

Figure 12: Device Activation Activity (Sheet 3, Connector DA_2, Type 4B Tag Platform) – Flow Chart

Symbols in this section refer to corresponding symbols in Figure 12.

Requirements 29: Device Activation Activity – Type 4B Tag Platform

Poll Mode	
9.4.5.1	Symbol 0: If INT_NFCIDX_SLEEP[INT_INDEX] is equal to 1b (i.e. the device is in **SLEEP_B** Sub-state), then the NFC Forum Device MUST proceed to Symbol 1. Otherwise, the NFC Forum Device MUST proceed to Symbol 3.
9.4.5.2	Symbol 1: The NFC Forum Device MUST send an ALLB_REQ Command as specified in [DIGITAL].
9.4.5.3	Symbol 2: The NFC Forum Device MUST set INT_NFCIDX_SLEEP[0:n] equal to 0b
9.4.5.4	Symbol 3: The NFC Forum Device MUST send an ATTRIB Command as specified in [DIGITAL], containing the NFCID0 included in INT_NFCIDX. If a Valid ATTRIB Response is received, the NFC Forum Device MUST store the ATTRIB Response to GRE_ATTRIB and it MUST conclude the NFC-B Activation Activity. Refer to [DIGITAL] for the definition of the ATTRIB Command and Response.

9.4.6 Flow Chart and Requirements for NFC-F

The purpose of the NFC-F Device Activation Activity is to activate an NFC Forum Device within range that has activated support for NFC-F Technology (subset). Such devices(?) may support NFC-DEP Protocol or Type 3 Tag Platform.

Figure 13 illustrates the NFC-DEP Protocol (NFC-F) and Type 3 Tag Platform part of the Activation Activity.

NOTE There is no specific action for the Type 3 Tag Platform as this platform is activated implicitly upon completion of the NFC-F Collision Resolution Activity.

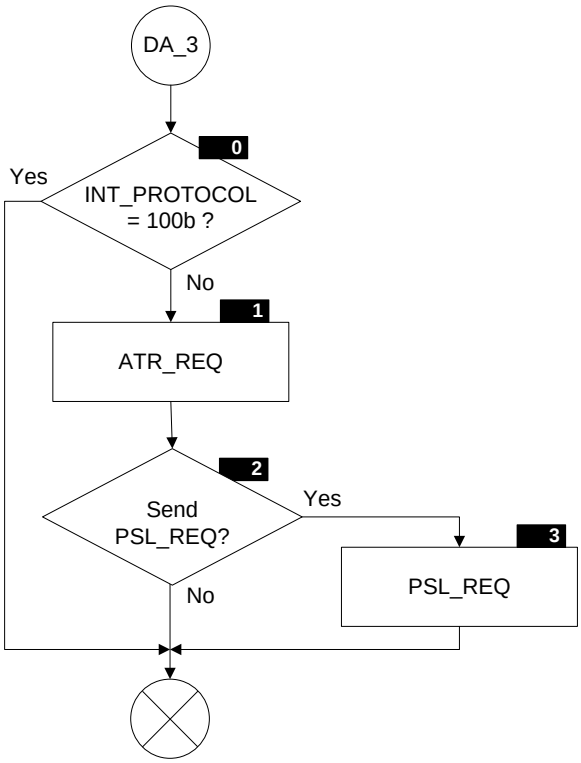

Figure 13: Device Activation Activity (Sheet 4, Connector DA_3, NFC-DEP (NFC-F)) – Flow Chart

Symbols in this section refer to corresponding symbols in Figure 13.

Requirements 30: Device Activation Activity – NFC-DEP (NFC-F)

Poll Mode	
9.4.6.1	Symbol 0: If INT_PROTOCOL is equal to 100b, then the NFC Forum Device MUST conclude the Activation Activity.
9.4.6.2	Symbol 1: The NFC Forum Device MUST send an ATR_REQ Command as specified in [DIGITAL], containing the identifier included in INT_NFCIDX. The NFC Forum Device MUST handle the ATR_RES Response as specified in [DIGITAL]. If a Valid ATR_RES Response is received, the NFC Forum Device MUST store the ATR_RES Response to GRE_ATR.
9.4.6.3	Symbol 2: The NFC Forum Device MUST proceed to Symbol 3 if the following conditions apply • PSL_REQ/RES is supported • The Bitrate specified by CON_BITR_NFC_DEP is different that the current Bit rate • The device identified by INT_INDEX is the only device that the NFC Forum Device activates during execution of the active Profile Otherwise, the NFC Forum Device MUST conclude the NFC-F Activation Activity. *The NFC Forum Device MAY also proceed to Symbol 3 if it wants to change the Length Reduction Values by using the FSL parameter of PSL_REQ as defined in [DIGITAL].*
9.4.6.4	Symbol 3: The NFC Forum Device MUST send a PSL_REQ. • If CON_BITR_NFC_DEP is equal to 1, then the NFC Forum Device MUST set DSI equal to 000b. • If CON_BITR_NFC_DEP is equal to 2, then the NFC Forum Device MUST set DSI equal to 001b. • If CON_BITR_NFC_DEP is equal to or larger than 3, then the NFC Forum Device MUST set DSI equal to 010b. The PSL_REQ Command MUST be coded as specified in [DIGITAL]. The NFC Forum Device MUST handle the PSL_REQ Response as specified in [DIGITAL]. If a Valid PSL_RES Response is received, the NFC Forum Device MUST: • Set CON_BITR_NFC_DEP according to the Bitrate specified by the DSI parameter in PSL_REQ • Conclude the NFC-F Activation Activity

NOTE If DSI has been set to 000 and a valid PSL_RES Response has been received, the further communication uses NFC-A technology.

9.5 Data Exchange Activity

This section describes the Data Exchange Activity.

9.5.1 Pre-conditions

There are no Configuration Parameters defined for this Activity.

The Input Parameters for the Device Activation Activity are listed in Table 21:

Table 21: Data Exchange Activity – Input Parameters

Name	Format	Size	Description
INT_INDEX	Integer	1 Byte	Index to the identifier of device to exchange data with.
INT_PROTOCOL	Binary	3 bit	Protocol of device to exchange data with: - 000b: Use NFC-DEP - 001b: Use ISO-DEP - 010b: Use Type 1 Tag Platform - 011b: Use Type 2 Tag Platform - 100b: Use Type 3 Tag Platform

NOTE Use of Type 4 Tag Platform is covered by use of ISO-DEP.

The data requested from the Greedy Collection is listed in Table 22:

Table 22: Device Activation Activity – Input from Greedy Collection

Name	Format	Size	Description
GRE_ATR	hexadecimal	≥ 17 Bytes	ATR_RES Response of device activated
GRE_RATS	hexadecimal	≥ 2 Bytes	RATS Response of device activated
GRE_ATTRIB	hexadecimal	≥ 1 Byte	ATTRIB Response of device activated

9.5.2 Post-conditions

The Output Parameters returned to the Resolution Process are listed in Table 23:

Table 23: Data Exchange Activity – Output Parameters

Name	Format	Size	Description
INT_INDEX	Integer	1 Byte	Index to the identifier of the active device

There is no data returned to the Greedy Collection by this Activity.

9.5.3 Flow Chart (Normative)

The Data Exchange Activity to be performed depends on the value of the INT_PROTOCOL parameter and is defined in the normative Figure 14.

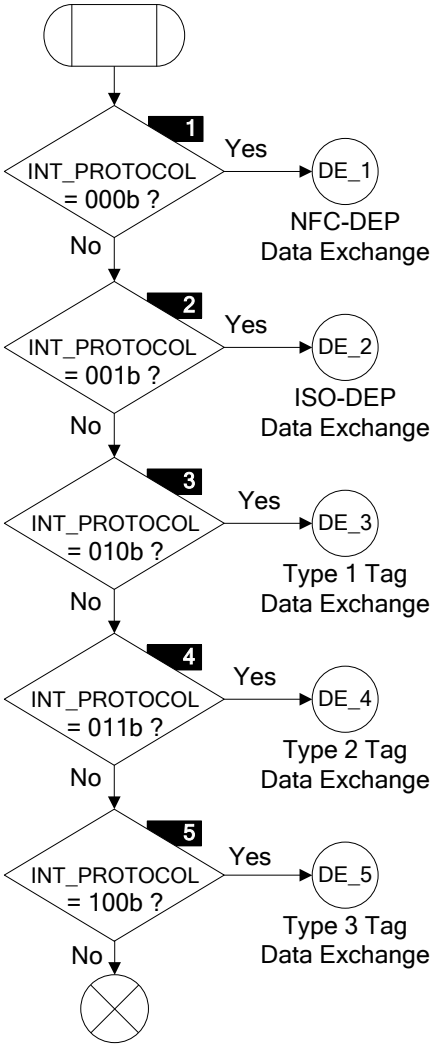

Figure 14: Data Exchange Activity (Sheet 1, entry) – Normative Flow Chart

9.5.4 Flow Chart and Requirements for NFC-DEP

The purpose of the NFC-DEP Data Exchange Activity is to exchange data with an NFC Forum Device within range, communicating over NFC-DEP.

Figure 15 illustrates the NFC-DEP-related part of the Data Exchange Activity.

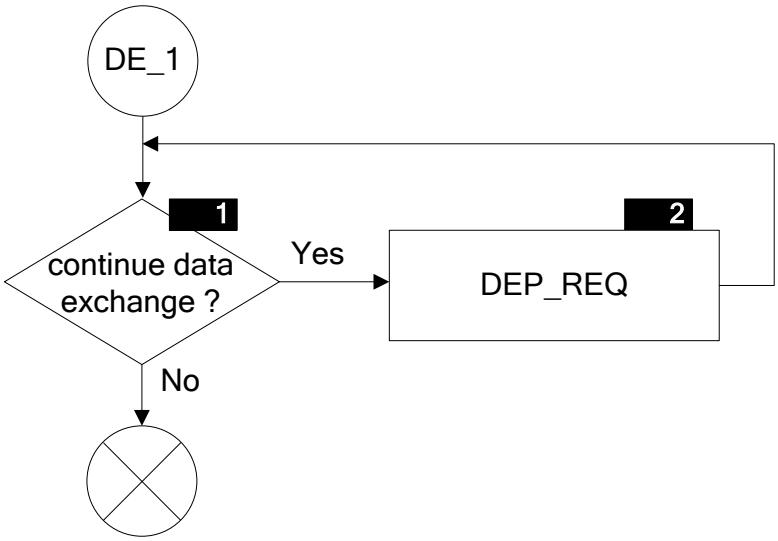

Figure 15: Data Exchange Activity (Sheet 2, connector DE_1, NFC-DEP) – Flow Chart

Symbols in this section refer to corresponding symbols in Figure 15.

Requirements 31: Data Exchange Activity – NFC-DEP

Poll Mode	
9.5.4.1	Symbol 1, Symbol 2: As long as data exchange continues, as controlled by the adjacent upper layer, the NFC Forum Device MUST send a DEP_REQ Command and it MUST wait for the DEP_RES Response afterward, as specified in [DIGITAL].

9.5.5 Flow Chart and Requirements for ISO-DEP

The purpose of the ISO-DEP Data Exchange Activity is to exchange data with an NFC Forum Device within range, communicating over ISO-DEP .

Figure 16 illustrates the ISO-DEP-related part of the Data Exchange Activity.

NOTE The Flow Chart and Requirements in this section also include the Type 4 Tag Platform as specified in [DIGITAL] and [T4TOP].

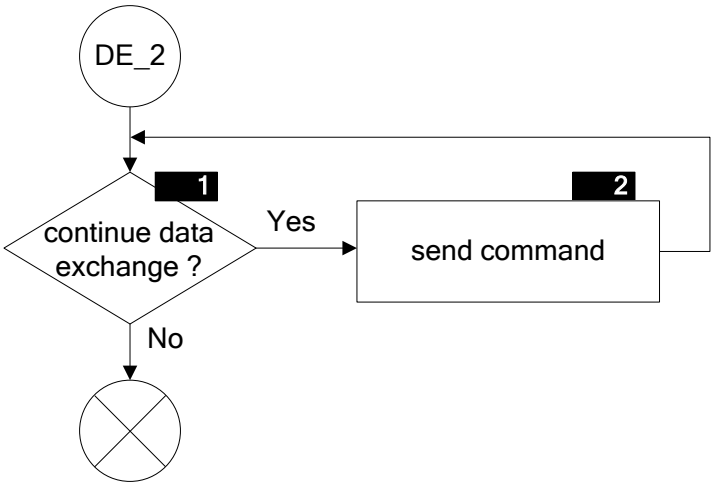

Figure 16: Data Exchange Activity (Sheet 3, Connector DE_2, ISO-DEP) – Flow Chart

Symbols in this section refer to corresponding symbols in Figure 16.

Requirements 32: Data Exchange Activity – ISO-DEP

Poll Mode	
9.5.5.1	Symbol 1, Symbol 2: As long as data exchange continues, as controlled by the adjacent upper layer, the NFC Forum Device MUST send Commands and receive Responses as specified in [DIGITAL] for ISO-DEP.

9.5.6 Flow Chart and Requirements for Type 1 Tag Platform

The purpose of the Type 1 Tag Platform Data Exchange Activity is to exchange data with an NFC Forum Device within range that has activated support for the Type 1 Tag Platform.

Figure 17 illustrates the Type 1 Tag Platform-related part of the Data Exchange Activity.

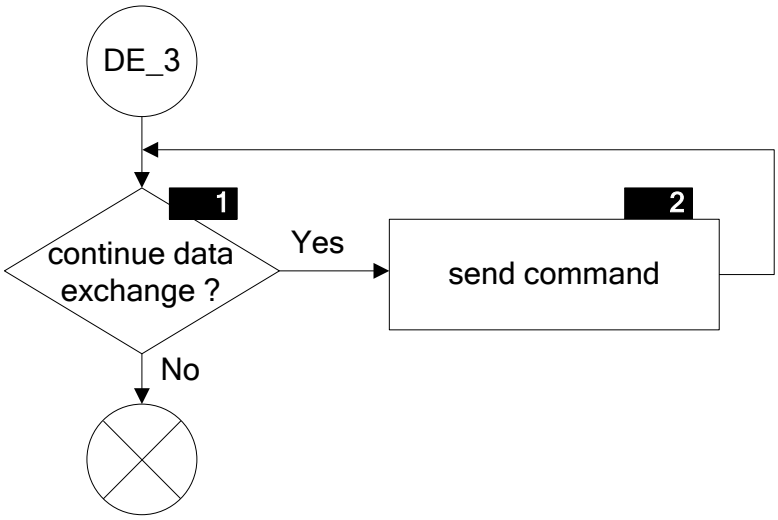

Figure 17: Data Exchange Activity (Sheet 4, Connector DE_3, Type 1 Tag Platform) – Flow Chart

Symbols in this section refer to corresponding symbols in Figure 17.

Requirements 33: Data Exchange Activity – Type 1 Tag Platform

Poll Mode	
9.5.6.1	Symbol 1, Symbol 2: As long as data exchange continues, as controlled by the adjacent upper layer, the NFC Forum Device MUST send Commands and receive Responses as specified for the Type 1 Tag Platform in [DIGITAL] and [T1TOP].
The NFC Forum Device MAY send Commands and receive Responses that are proprietary for the Type 1 Tag.	

9.5.7 Flow Chart and Requirements for Type 2 Tag Platform

The purpose of the Type 2 Tag Platform Data Exchange Activity is to exchange data with an NFC Forum Device within range that has activated support for the Type 2 Tag Platform.

Figure 18 illustrates the Type 2 Tag Platform-related part of the Data Exchange Activity.

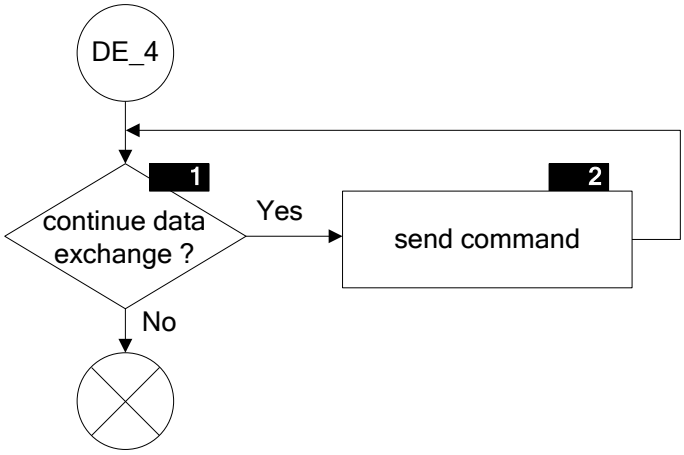

Figure 18: Data Exchange Activity (Sheet 5, connector DE_4, Type 2 Tag Platform) – Flow Chart

Symbols in this section refer to corresponding symbols in Figure 18.

Requirements 34: Data Exchange Activity – Type 2 Tag Platform

Poll Mode	
9.5.7.1	Symbol 1, Symbol 2: As long as data exchange continues, as controlled by the adjacent upper layer, the NFC Forum Device MUST send Commands and receive Responses as specified for the Type 2 Tag Platform in [DIGITAL] and [T2TOP].
The NFC Forum Device MAY send Commands and receive Responses that are proprietary for the Type 2 Tag.	

9.5.8 Flow Chart and Requirements for Type 3 Tag Platform

The purpose of the Type 3 Tag Platform Data Exchange Activity is to exchange data with an NFC Forum Device within range that has activated support for the Type 3 Tag Platform.

Figure 19 illustrates the Type 3 Tag Platform related part of the Data Exchange Activity.

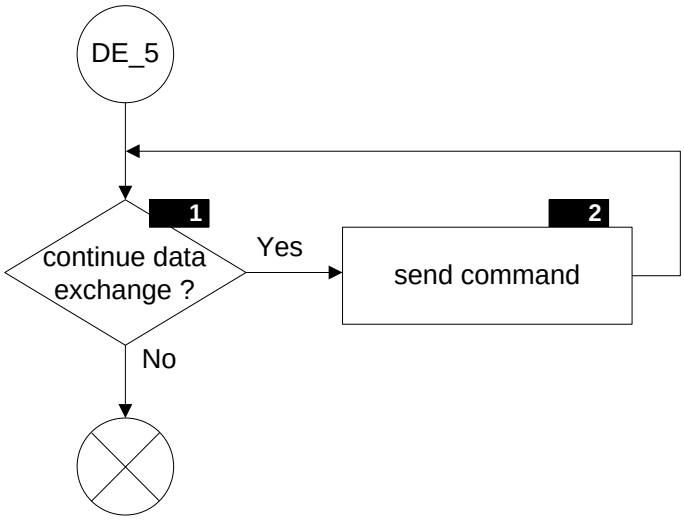

Figure 19: Data Exchange Activity (Sheet 6, connector DE_5, Type 3 Tag Platform) – Flow Chart

Symbols in this section refer to corresponding symbols in Figure 19.

Requirements 35: Data Exchange Activity – Type 3 Tag Platform

Poll Mode	
9.5.8.1	Symbol 1, Symbol 2: As long as data exchange continues, as controlled by the adjacent upper layer, the NFC Forum Device MUST send Commands and receive Responses as specified for the Type 3 Tag Platform in [DIGITAL] and [T3TOP].
The NFC Forum Device MAY send Commands and receive Responses that are proprietary for the Type 3 Tag.	

9.5.9 Flow Chart and Requirements for Type 3 Tag Platform selection

To select a Type 3 Tag Platform with a specific system code, the NFC Forum Device in Poll Mode needs to send a SENSF_REQ Command with the corresponding parameter settings. This includes the selection of Type 3 Tag Platforms that are NDEF enabled.

Figure 20 illustrates the Type 3 Tag Platform Selection flow chart.

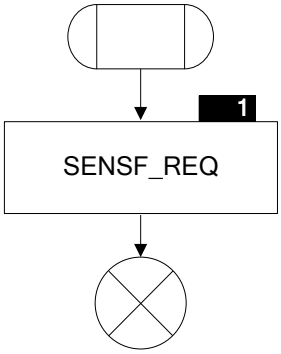

Figure 20: Type 3 Tag Platform Selection – Flow Chart

Symbols in this section refer to corresponding symbols in Figure 20.

Requirements 36: Type 3 Tag Selection

Poll Mode	
9.5.9.1	Symbol 1: If the NFC Forum Device needs to select a specific Type 3 Tag Platform, the NFC Forum Device MUST send a SENSF_REQ Command with the parameter values set by the adjacent upper layer. To select an NDEF-enabled Type 3 Tag Platform, the NFC Forum Device MUST set SC to 12FCh and RC to 00h. The NFC Forum Device MUST handle the SENSF_RES Response as specified in [DIGITAL].
If Valid SENSF_RES Responses are received, the NFC Forum Device MAY use the data contained in a SENSF_RES Responses (e.g. NFCID2) during the further communication in the Data Exchange Activity instead of the data associated to INT_INDEX .	

9.6 Device Deactivation Activity

This section describes the Device Deactivation Activity.

9.6.1 Pre-conditions

There are no Configuration Parameters defined for this Activity.

The Parameters requested from Resolution for the Device Deactivation Activity are listed in Table 24:

Table 24: Device Deactivation Activity – Input Parameters

Name	Format	Size	Description
INT_INDEX	integer	1 Byte	Index to the identifier of device to be deactivated
INT_PROTOCOL	binary	3 bit	Protocol to be deactivated: - 000b: Using NFC-DEP - 001b: Using ISO-DEP - 010b: Using Type 1 Tag Platform protocol - 011b: Using Type 2 Tag Platform protocol - 100b: Using Type 3 Tag Platform protocol

There is no data needed from the Greedy Collection for this Activity.

9.6.2 Post-conditions

The Output Parameters returned to the Resolution Process are listed in Table 25:

Table 25: Device Deactivation Activity – Output Parameters

Name	Format	Size	Description
INT_INDEX	Integer	1 Byte	Index to the identifier of the device deactivated

There is no data returned to the Greedy Collection by this Activity.

9.6.3 Flow Chart (Normative)

The Device Deactivation Activity to be performed depends on the value of the INT_PROTOCOL parameter and is defined in the normative Figure 21.

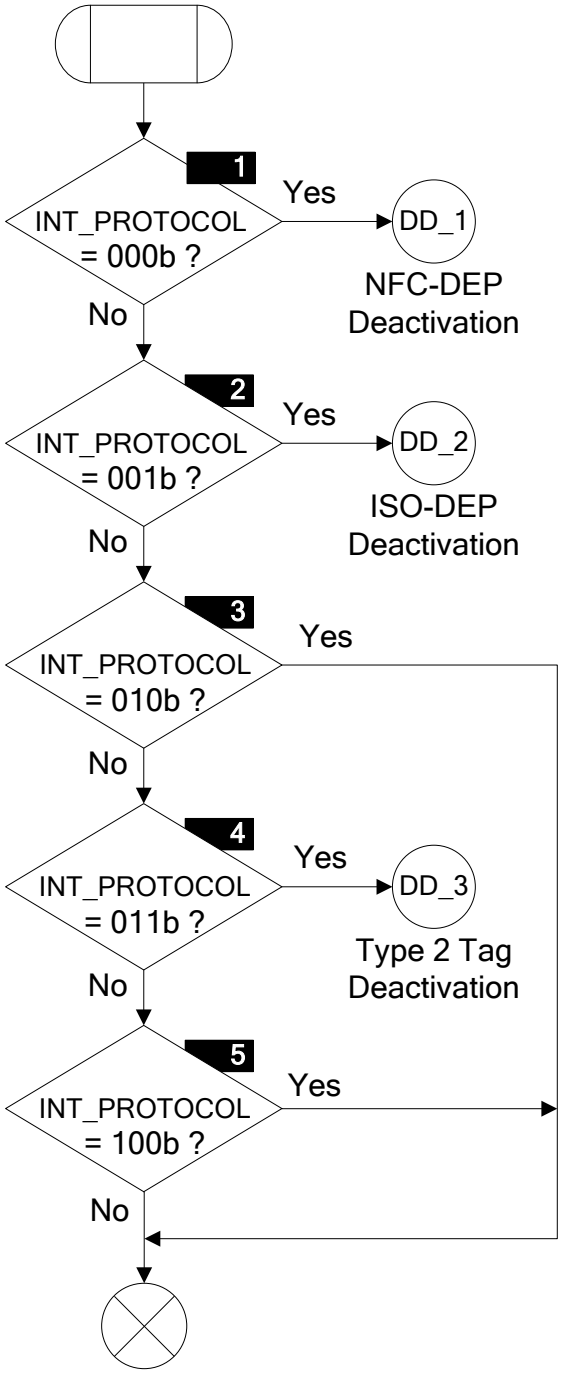

Figure 21: Device Deactivation Activity (Sheet 1, Entry) – Normative Flow Chart

9.6.4 Flow Chart and Requirements for NFC-DEP

The purpose of the NFC-DEP Device Deactivation Activity is to deactivate an NFC Forum Device within range, communicating over NFC-DEP.

Figure 22 illustrates the NFC-DEP-related part of the Deactivation Activity.

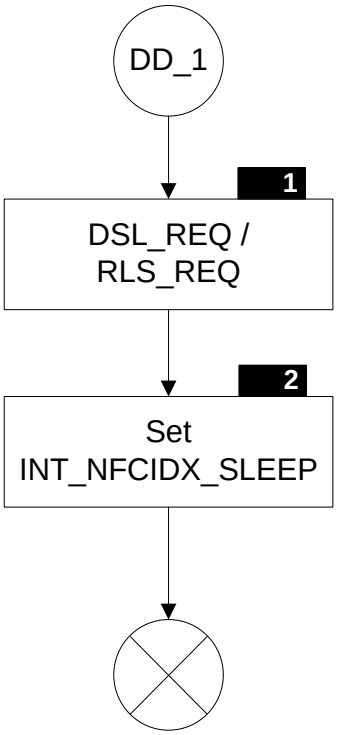

Figure 22: Deactivation Activity (Sheet 2, Connector DD_1, NFC-DEP) – Flow Chart

Symbols in this section refer to corresponding symbols in Figure 22.

Requirements 37: Deactivation Activity – NFC-DEP

Poll Mode	
9.6.4.1	Symbol 1: The NFC Forum Device MUST send a RLS_REQ Command or DSL_REQ as specified in [DIGITAL].
9.6.4.2	Symbol 2: Upon receipt of a RLS_RES, the NFC Forum Device MUST set INT_NFCIDX_SLEEP[INT_INDEX] equal to 0b. For NFC-A, upon receipt of a DSL_RES, the NFC Forum Device MUST set INT_NFCIDX_SLEEP[INT_INDEX] equal to 1b. For NFC-F, upon receipt of a DSL_RES, the NFC Forum Device MUST set INT_NFCIDX_SLEEP[INT_INDEX] equal to 0b.

9.6.5 Flow Chart and Requirements for ISO-DEP

The purpose of the ISO-DEP Device Deactivation Activity is to deactivate an NFC Forum Device within range, communicating over ISO-DEP.

Figure 23 illustrates the ISO-DEP-related part of the Deactivation Activity.

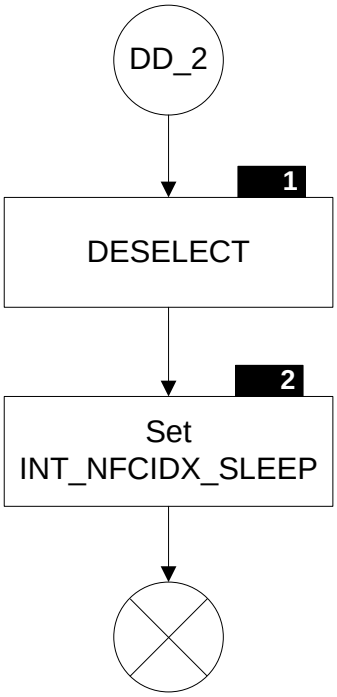

Figure 23: Deactivation Activity (Sheet 3, connector DD_2, ISO-DEP) – Flow Chart

Symbols in this section refer to corresponding symbols in Figure 23.

Requirements 38: Deactivation Activity – ISO-DEP

Poll Mode	
9.6.5.1	Symbol 1: The NFC Forum Device MUST send an S(DESELECT) Request, as specified in [DIGITAL].
9.6.5.2	Symbol 2: Upon receipt of the S(DESELECT) Response, the NFC Forum Device MUST set INT_NFCIDX_SLEEP[INT_INDEX] is equal to 1b.

9.6.6 Flow Chart and Requirements for Type 1 Tag Platform

For a Type 1 Tag Platform, there is no particular Device Deactivation Activity.

9.6.7 Flow Chart and Requirements for Type 2 Tag Platform

The purpose of the Type 2 Tag Platform Deactivation Activity is to deactivate a Type 2 Tag Platform within range.

Figure 24 illustrates the Type 2 Tag Platform-related part of the Deactivation Activity.

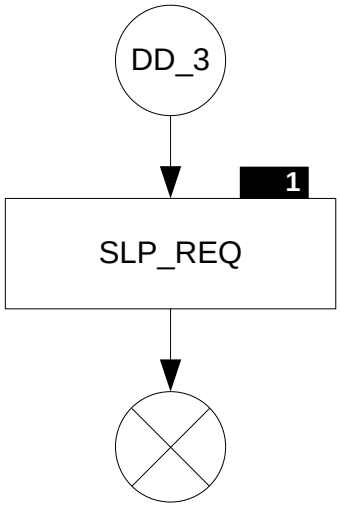

Figure 24: Deactivation Activity (Sheet 4, connector DD_3, Type 2 Tag Platform) – Flow Chart

Symbols in this section refer to corresponding symbols in Figure 24.

Requirements 39: Deactivation Activity – Type 2 Tag Platform

Poll Mode	
9.6.7.1	Symbol 1: The NFC Forum Device MUST send a SLP_REQ Command, as specified in [DIGITAL].

9.6.8 Flow Chart and Requirements for Type 3 Tag Platform

For a Type 3 Tag Platform, there is no particular Device Deactivation Activity.

10 Poll Mode – Profiles

A Profile defines a sequence of Activities to be performed by the NFC Forum Device. This sequence is not necessarily fixed, but can develop based on the outcome of the Resolution Processes.

A Profile definition consists of:

- The Configuration Parameters values of the Activities used in the Profile
- The Resolution Process of the Profile

A Resolution Process consists of an algorithm that is controlled by the adjacent upper layer and determines the next Activity to call, depending on the outcome of the previous Activity. For each possible Activity to call next, the Resolution Process provides the necessary input Parameters.

The adjacent upper layer has the freedom to execute profiles sequentially in any order and it may also freely switch between Profiles in Poll Mode and Listen Mode.

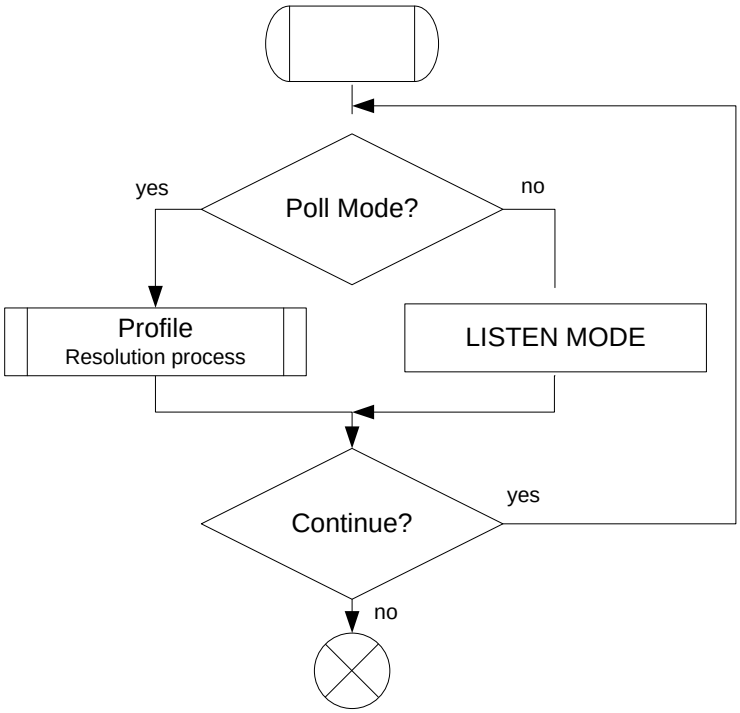

Figure 25: Sequential execution of profiles

For the purpose of this document, only a limited set of Profiles is defined. For these definitions, the focus is on realizing the NFC Forum Communication use cases. These use cases are covered through three Profiles: P2P, NDEF, and P2PNDEF. Each Profile is defined to run without user intervention during the communication process.

NOTE User intervention may be required prior to the communication process to set up the Profiles.

10.1 Greedy Collection Information

For some decisions in the resolution processes, information contained in the Greedy Collection must be evaluated. Table 26 describes what information in the Greedy Collection must be used for a specific decision.

Table 26: Greedy Collection Information Required for Resolution Processes

Decision	Greedy Collection	More Information
Is NFC-A device capable of NFC-DEP?	Determined by b6 and b7 of the SEL_RES of the device, which is contained in GRE_SEL_RES[].	[DIGITAL] Section 4.8.2
Is NFC-F device capable of NFC-DEP?	Determined by Byte 1 and Byte 2 of NFCID2 field in SENSF_RES. SENSF_RES of the device, which is contained in GRE_POLL_F[] (after Technology Detection) or GRE_SENSF_RES[] (after Collision Resolution).	[DIGITAL] Section 6.6.2
Does device support Type 1 Tag Platform?	Determined by b1–b5 of SENS_RES of the device, which is contained in GRE_POLL_A[].	[DIGITAL] Section 4.6.3
Does device support Type 2 Tag Platform?	Determined by b6 and b7 of the SEL_RES of the device, which is contained in GRE_SEL_RES[].	[DIGITAL] Section 4.8.2
Does device support Type 3 Tag Platform?	Determined by Byte 1 and Byte 2 of NFCID2 field in SENSF_RES. SENSF_RES of the device, which is contained in GRE_POLL_F[] (after Technology Detection) or GRE_SENSF_RES[] (after Collision Resolution).	[DIGITAL] Section 6.6.2
Does NFC-A device support ISO-DEP?	Determined by b6 and b7 of SEL_RES of the device, which is contained in GRE_SEL_RES[].	[DIGITAL] Section 4.8.2
Does NFC-B device support ISO-DEP?	Determined by b1 of Protocol_Type field of SENSB_RES, which is contained in GRE_POLL_B[] (after Technology Detection) or GRE_SENSB_RES[] (after Collision Resolution).	[DIGITAL] Section 5.6.2

10.2 P2P Poll Profile

The P2P Poll Profile is developed to establish a communication with another NFC Forum device using the NFC-DEP protocol. To enable a high data throughput for LLCP, the Profile uses the highest bit rate supported by the NFC Forum Device in Listen Mode for NFC-DEP. The Profile ends without establishing a communication if multiple NFC-DEP capable devices are found.

10.2.1 Configuration Parameters

For this Profile, the Technology Detection uses a speed of 424kbit/s for NFC-F.

The Configuration Parameters for the P2P Poll Profile are listed in Table 27:

Table 27: P2P Poll Profile Configuration Parameters

Parameter	P2P
CON_POLL_A	0b
CON_POLL_B	0b
CON_POLL_F	1b
CON_POLL_P	0b
CON_BAIL_OUT_A	0b
CON_BAIL_OUT_B	0b
CON_DEVICES_LIMIT	01h
CON_ADV_FEAT	0b
CON_ATR	As defined in [DIGITAL]
CON_GB	LLCP Parameters
CON_RATS	n.a.
CON_ATTRIB	n.a.
CON_BITR_NFC_DEP	3[1]

10.2.2 Resolution Process

The resolution process of the P2P Poll Profile is defined by Figure 26.

[1] Start at 424 and stay at this bit rate

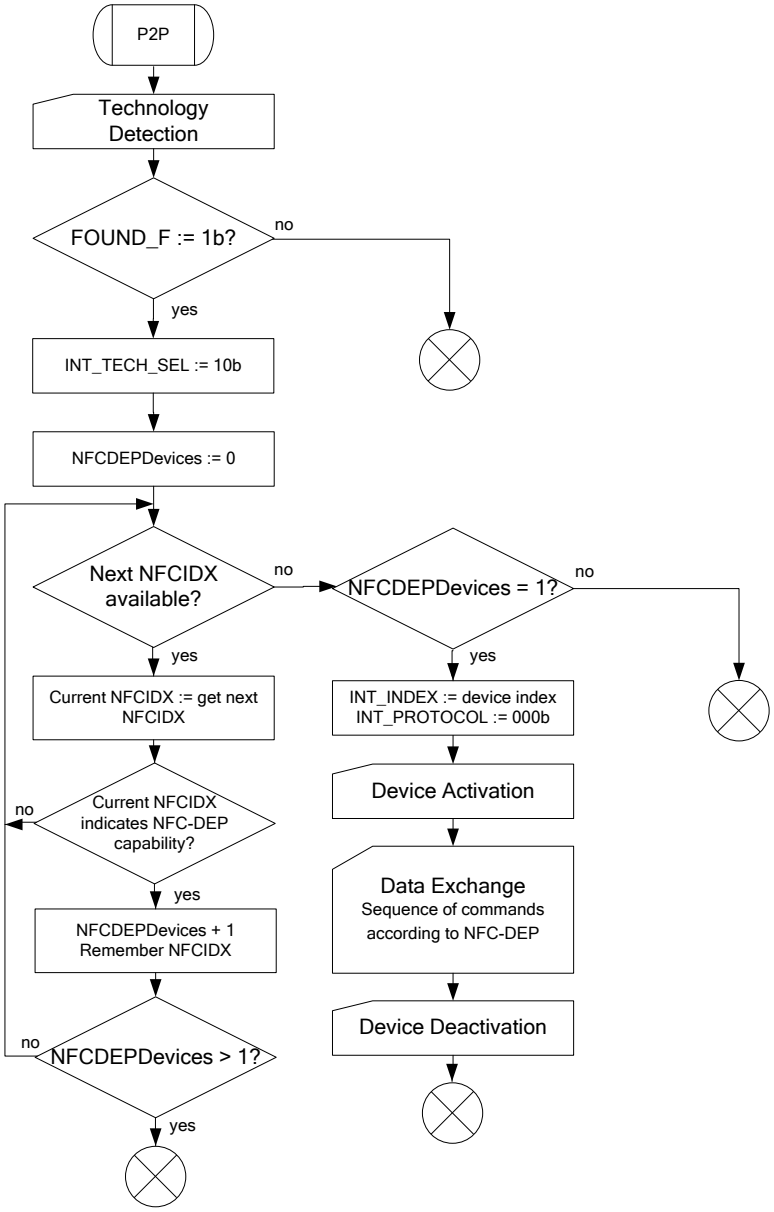

Figure 26: P2P Poll Profile Resolution Process

10.3 NDEF Poll Profile

The purpose of the NDEF Poll Profile is to access the NDEF data on a tag. The Profile first searches for an NDEF-capable tag and, if there is exactly one, it establishes a communication with it. Depending on the tag type, detecting NDEF on a tag may require that a data exchange Activity is performed with the device and READ Commands are issued according to the corresponding Type Tag Platform Operations specification. The Profile ends without establishing a communication if multiple NDEF-capable tags are detected.

10.3.1 Configuration Parameters

The Configuration Parameters for the NDEF Poll Profile are listed in Table 28:

Table 28: NDEF Poll Profile Configuration Parameters

Parameter	NDEF
CON_POLL_A	1b
CON_POLL_B	1b
CON_POLL_F	1b
CON_POLL_P	0b
CON_BAIL_OUT_A	0b
CON_BAIL_OUT_B	0b
CON_DEVICES_LIMIT	04h
CON_ADV_FEAT	0b
CON_ATR	n.a
CON_GB	None
CON_RATS	As defined in [DIGITAL]
CON_ATTRIB	As defined in [DIGITAL]
CON_BITR_NFC_DEP	0

10.3.2 Resolution Process

The resolution process of the NDEF Poll Profile is defined by Figure 27 and Figure 28.

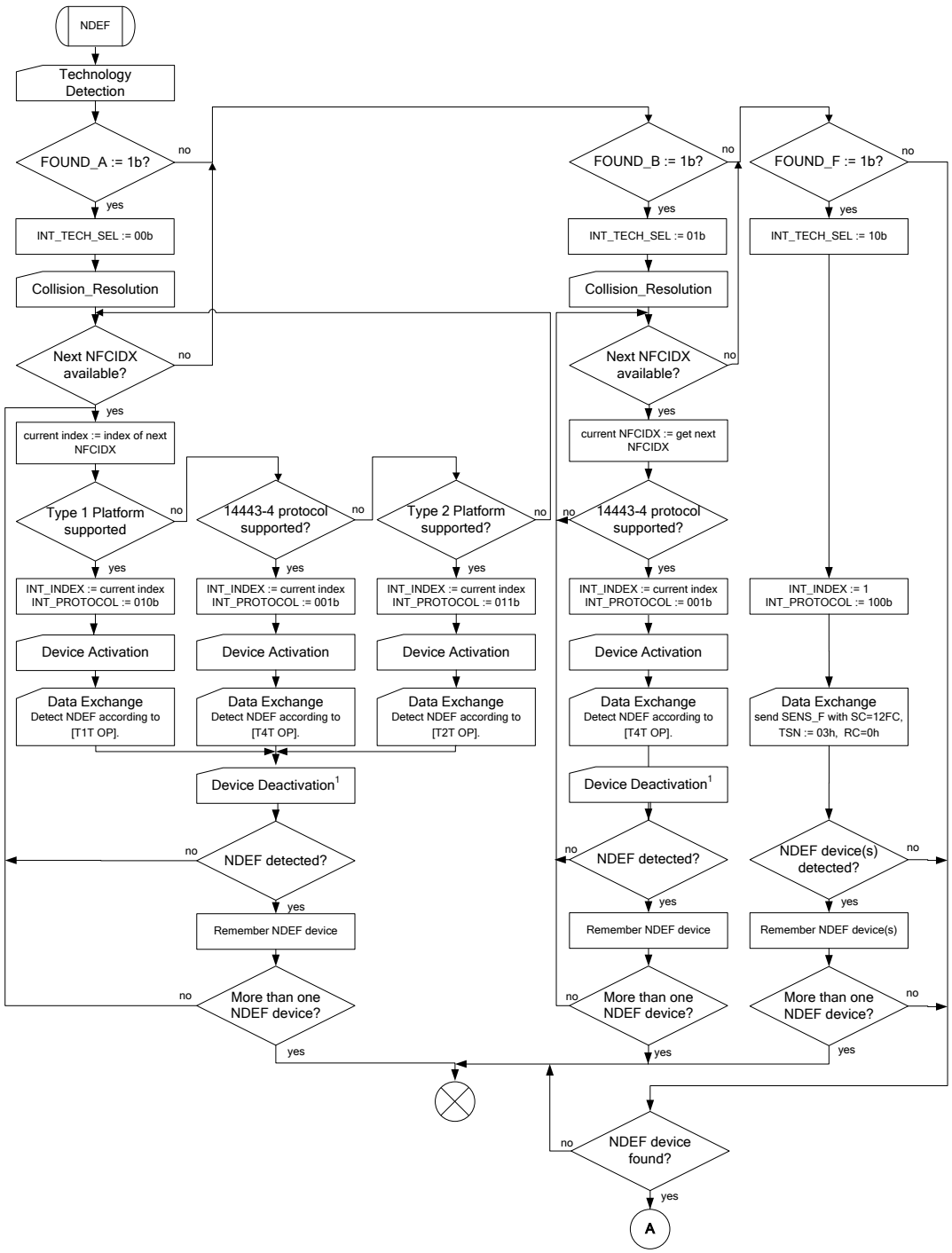

[1] Device Deactivation can be skipped in case NDEF was detected, no other NDEF and NFC-DEP capable devices have been detected before and the current device is the last device to be investigated.

Figure 27: NDEF Poll Profile Resolution Process – Sheet 1

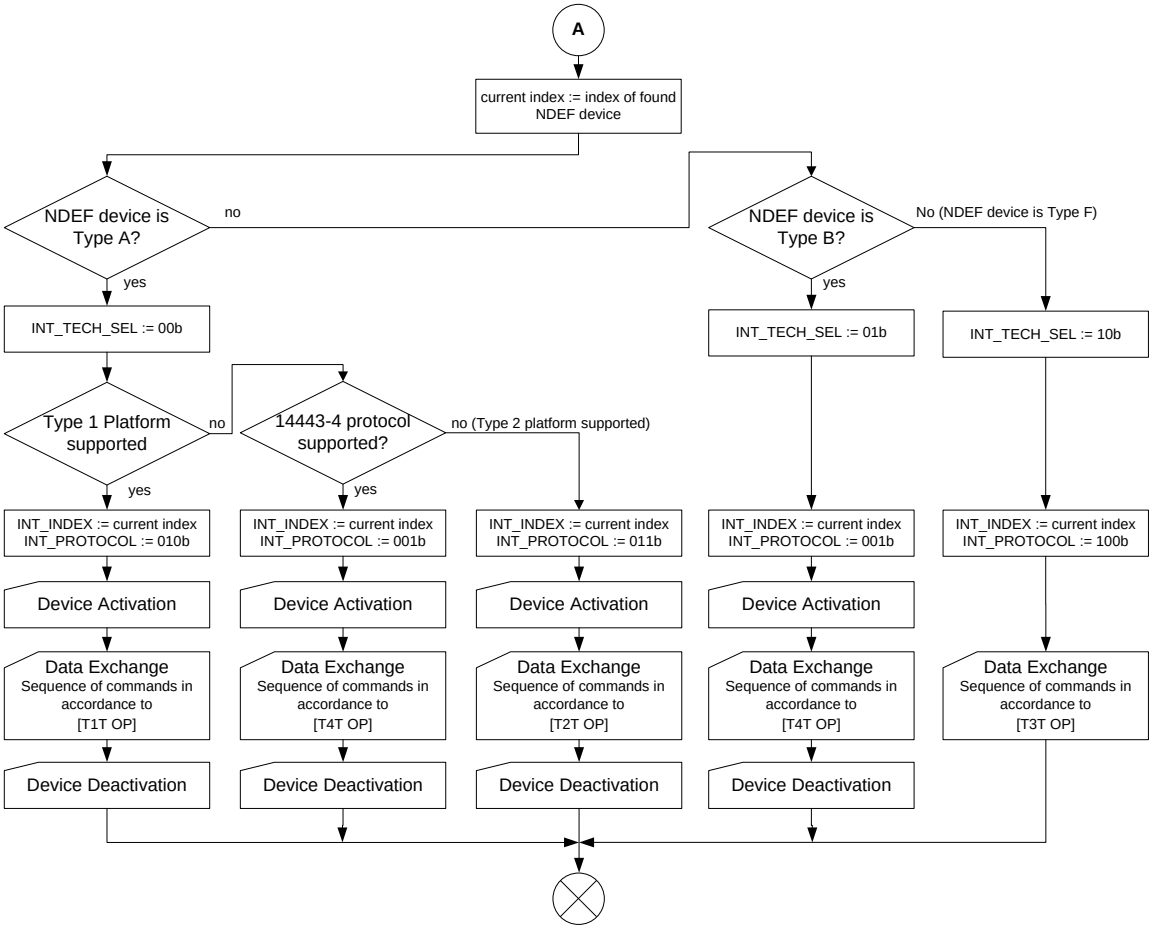

Figure 28: NDEF Poll Profile Resolution Process – Sheet 2

10.4 P2PNDEF Poll Profile

The P2PNDEF Profile searches for NDEF tags and NFC-DEP-capable devices. If exactly one device is identified, the Profile starts a communication session with this device. If the identified device is an NDEF-capable tag, the communication session allows the device to access NDEF on the tag. If the identified device is an NFC Forum Device, the communication session establishes an NFC-DEP communication between the devices. The Profile ends without establishing a communication if multiple NFC Forum devices or NFC Forum tags are detected.

10.4.1 Configuration Parameters

The Configuration Parameters for the P2PNDEF Poll Profile are listed in Table 29:

Table 29: P2PNDEF Poll Profile Configuration Parameters

Parameter	NDEF
CON_POLL_A	1b
CON_POLL_B	1b
CON_POLL_F	1b
CON_POLL_P	0b
CON_BAIL_OUT_A	0b
CON_BAIL_OUT_B	0b
CON_DEVICES_LIMIT	04h
CON_ADV_FEAT	0b
CON_ATR	As defined in [DIGITAL]
CON_GB	LLCP Parameters
CON_RATS	As defined in [DIGITAL]
CON_ATTRIB	As defined in [DIGITAL]
CON_BITR_NFC_DEP	3

10.4.2 Resolution Process

The resolution process has been split into parts by using subroutines to improve readability. Figure 29 shows the main flow of the resolution process. The “FOUND_[A|B|F] processing” subroutines (as shown in Figure 30, Figure 31, and Figure 32) detect the number of NDEF-enabled tags and NFC-DEP targets for the corresponding technology. The “Device communication” subroutine, as shown in Figure 33, handles the data exchange if a single communication partner has been identified.

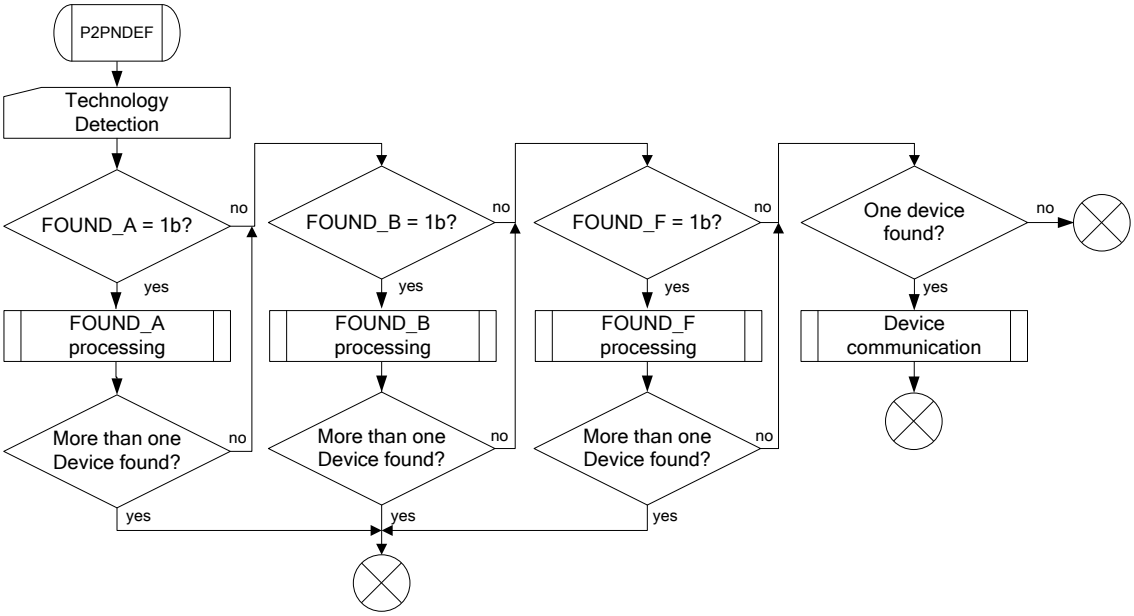

Figure 29: NDEFP2P Poll Profile Resolution Process – Main Flow

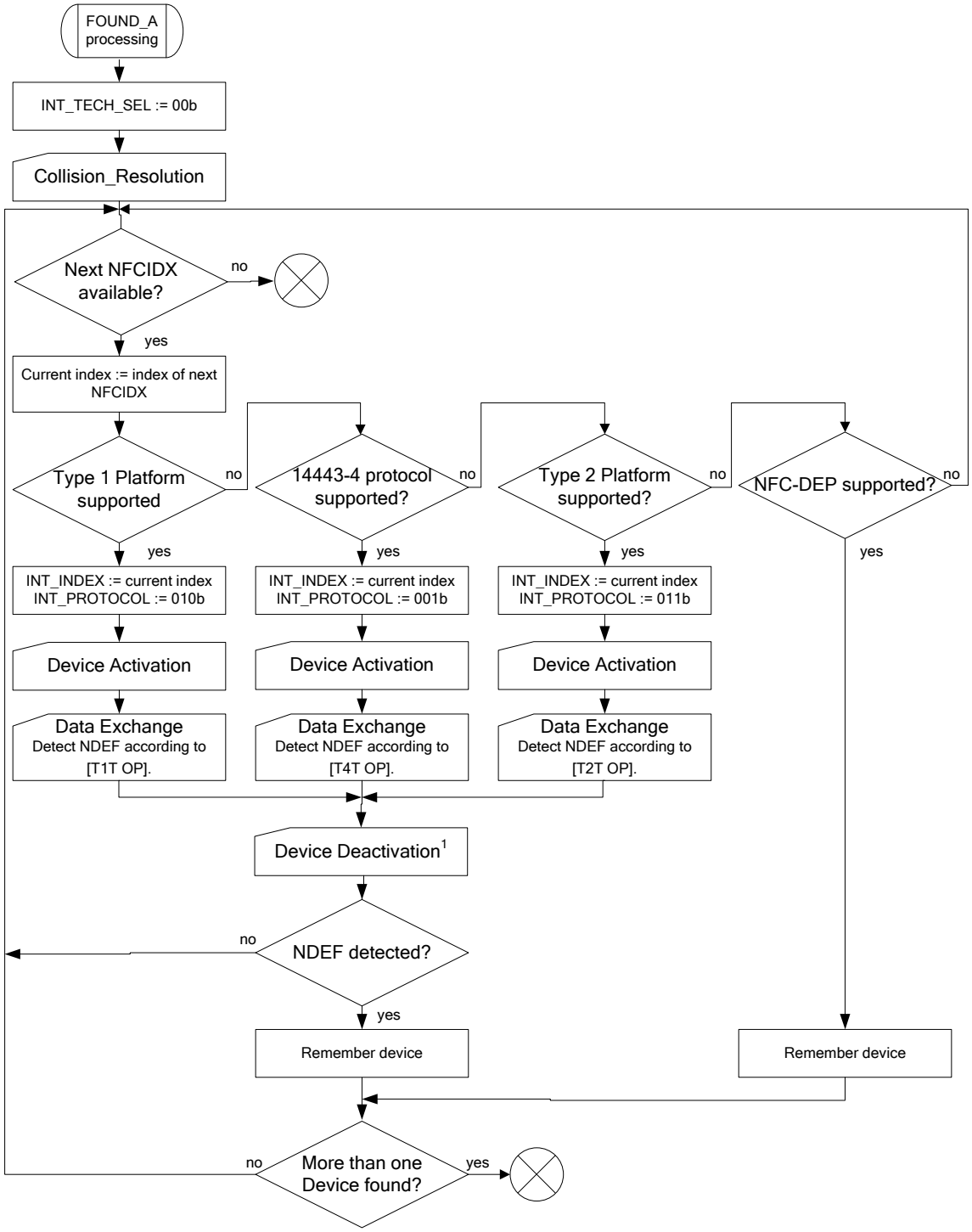

[1] Device Deactivation can be skipped in case NDEF was detected, no other NDEF and NFC-DEP capable devices have been detected before and the current device is the last device to be investigated.

Figure 30: NDEFP2P Poll Profile Resolution Process – FOUND_A Processing

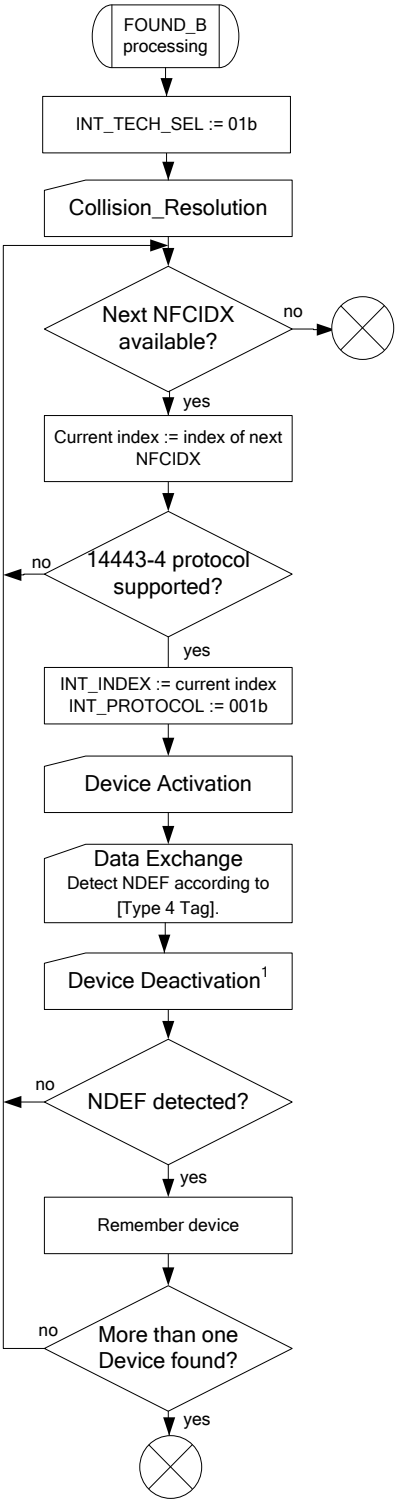

[1] Device Deactivation can be skipped in case NDEF was detected, no other NDEF and NFC-DEP capable devices have been detected before and the current device is the last device to be investigated.

Figure 31: NDEFP2P Poll Profile Resolution Process – FOUND_B Processing

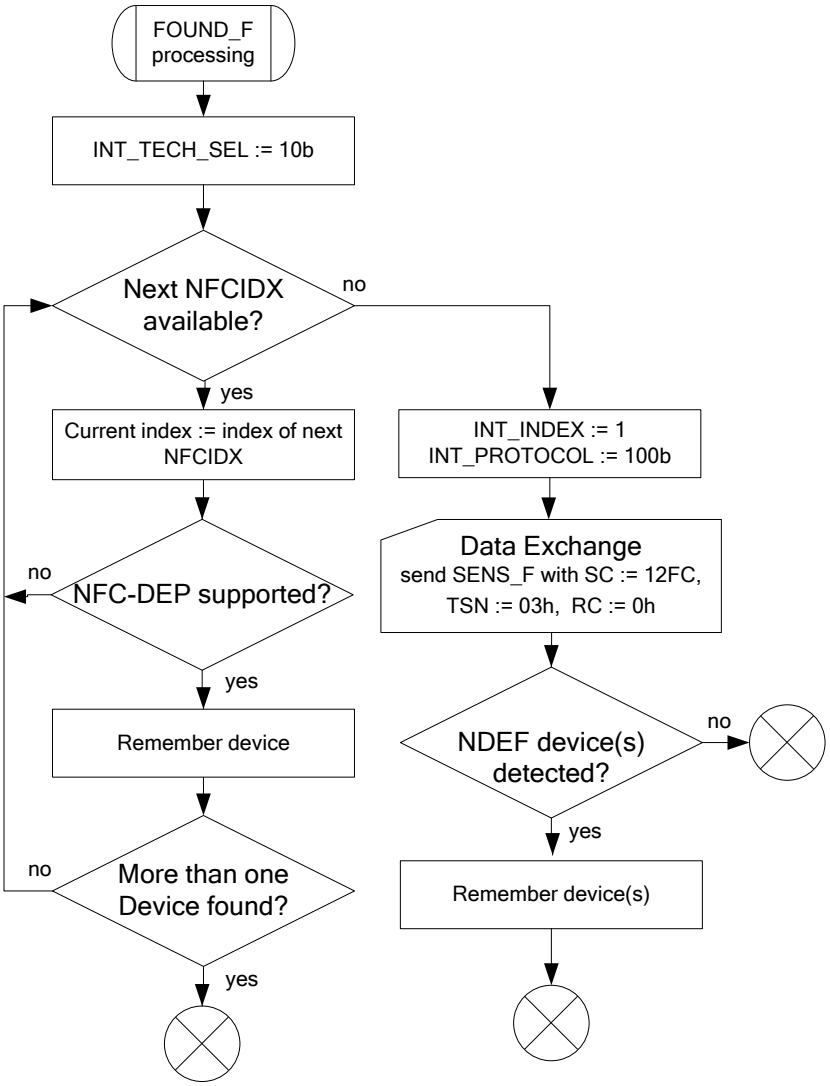

Figure 32: NDEFP2P Poll Profile Resolution Process – FOUND_F Processing

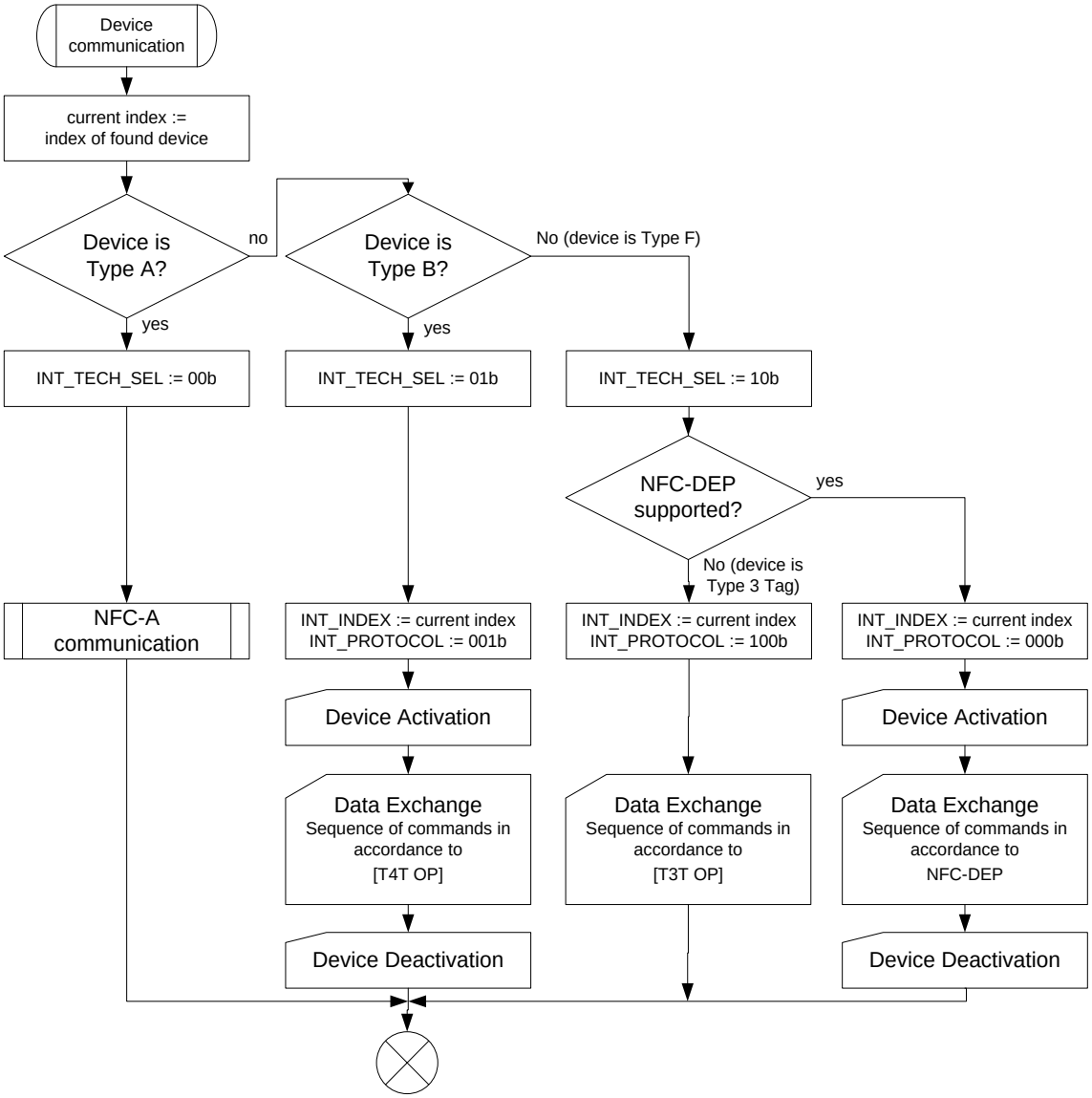

Figure 33: NDEFP2P Poll Profile Resolution Process – Device Communication

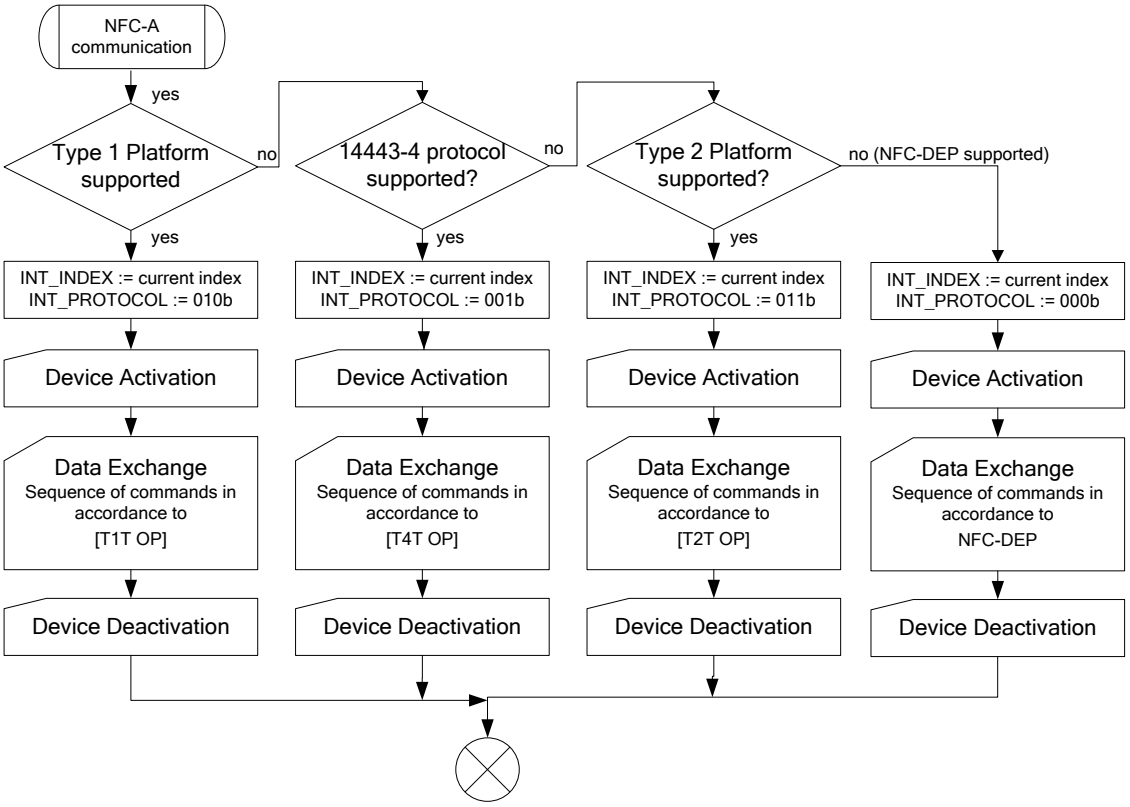

Figure 34: NDEFP2P Poll Profile Resolution Process – NFC-A Communication

A. Listen Mode – State Diagram (Informative)

Figure 35 shows a graphical representation of an NFC Forum Device in Listen Mode.

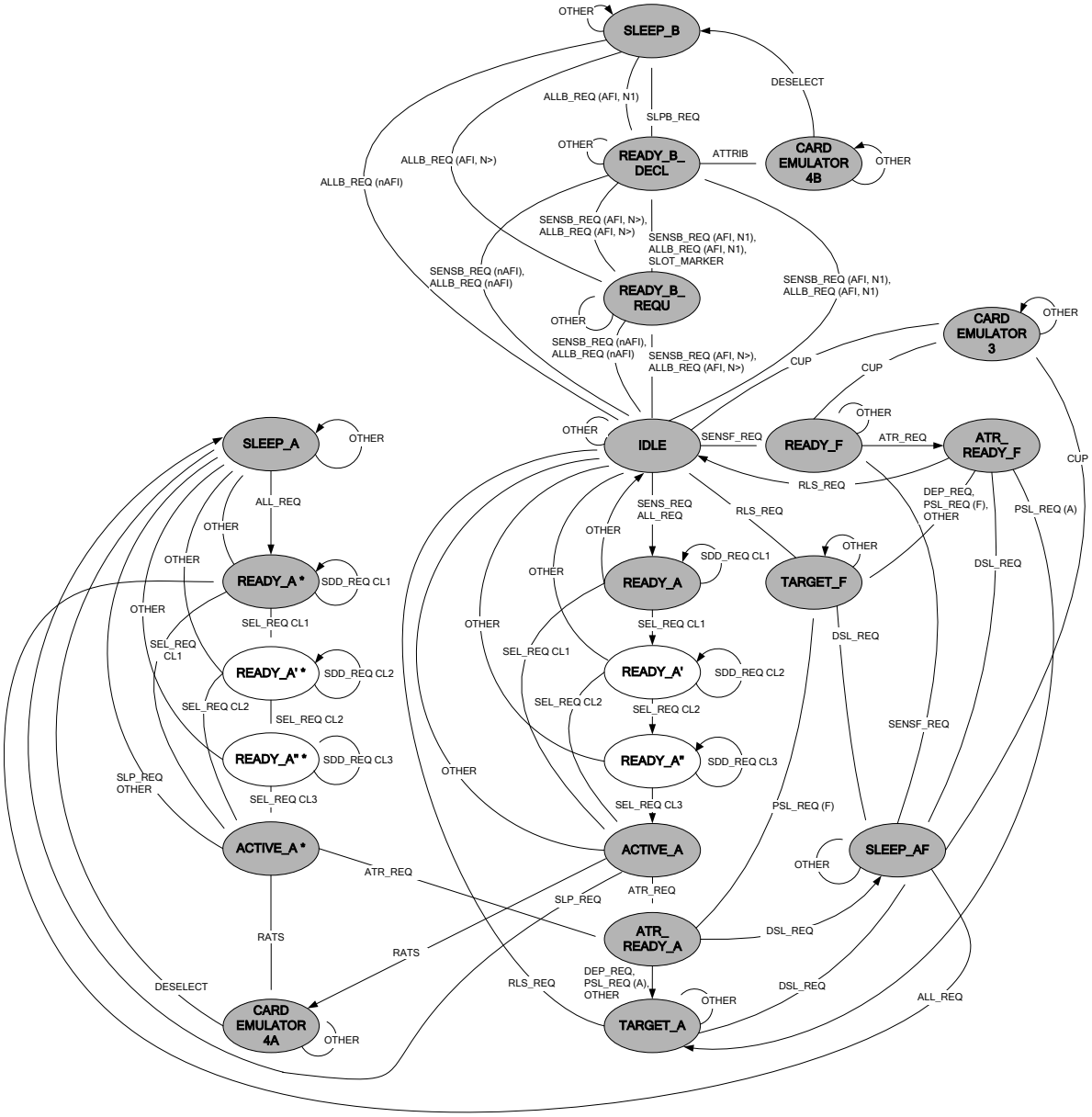

Figure 35: Listen Mode – State Diagram (Informative)

B. Values

Throughout this document, symbols are used to identify the values of Parameters. The actual values of the Parameters are listed in Table 30. For some of the Parameters, a minimum and maximum value is defined. Other Parameters are defined by a single value.

Parameters have a value for the NFC Forum Device in Poll Mode and for the NFC Forum Device in Listen Mode. Unless otherwise specified, the value for Poll Mode has to be used when the parameter is referenced in a Poll Mode requirement. The value for Listen Mode has to be used when referenced in a Listen Mode requirement.

Table 30: Poll Mode and Listen Mode Parameter Values

Parameter	Poll Mode Value			Listen Mode Value			Units
	Min	Nominal	Max	Min	Nominal	Max	
t_{FIELD_OFF}	5.1					5.0	ms
$PTGT_A$	0.5						ms
$PTGT_B$	3.8						ms
$PTGT_F$	0.5						ms
GT_A	5.1				See [DIGITAL].		ms
GT_B	5.1				See [DIGITAL].		ms
GT_{BF}	15.3				See GT_F in [DIGITAL].		ms
GT_{FB}	20.4				See GT_F in [DIGITAL].		ms

C. Revision History

The following table outlines the revision history of NFC Activity Specification.

Table 31: Revision History

Document Name	Revision and Release Date	Status	Change Notice	Supersedes
NFC Activity Specification	Version 1.0, November 2010	Technical Specification		